Cessna
A Textron Company

Pilot's Operating Handbook

and

FAA Approved Airplane Flight Manual

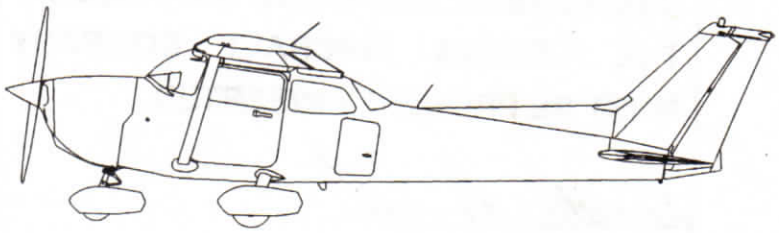

THIS PUBLICATION MUST BE CARRIED IN THE AIRPLANE AT ALL TIMES.

The Cessna Aircraft Company

Model 172S

Serial No. 172S9624

Registration No. N21180

This publication includes the material required to be furnished to the pilot by FAR Part 23 and constitutes the FAA Approved Airplane Flight Manual.

FAA APPROVAL

FAA APPROVED UNDER FAR 21 SUBPART J
The Cessna Aircraft Co
Delegation Option Manufacturer CE-1

Executive Engineer

Date: July 10, 1998

COPYRIGHT © 1998
The Cessna Aircraft Company
Wichita, Kansas USA

Member of GAMA

Original Issue - 8 July 1998

THIS MANUAL WAS PROVIDED FOR THE AIRPLANE IDENTIFIED ON THE TITLE PAGE ON 04/05/2004. SUBSEQUENT REVISIONS SUPPLIED BY THE CESSNA AIRCRAFT COMPANY MUST BE PROPERLY INSERTED.

The Cessna Aircraft Company, Aircraft Division

Pilot's Operating Handbook

and

FAA Approved Airplane Flight Manual

Serial Numbers 172S8001 and On

Original Issue - 8 July 1998

Revision 5 - 19 July 2004

PART NUMBER: 172SPHUS05

CONGRATULATIONS . . . .

Congratulations on your purchase and welcome to Cessna ownership! Your Cessna has been designed and constructed to give you the most in performance, value and comfort.

This Pilot's Operating Handbook has been prepared as a guide to help you get the most utility from your airplane. It contains information about your airplane's equipment, operating procedures, performance and suggested service and care. Please study it carefully and use it as a reference.

The worldwide Cessna Organization and Cessna Customer Service are prepared to serve you. The following services are offered by each Cessna Service Station:

- THE CESSNA AIRPLANE WARRANTIES, which provide coverage for parts and labor, are upheld through Cessna Service Stations worldwide. Warranty provisions and other important information are contained in the Customer Care Program Handbook supplied with your airplane. The Customer Care Card assigned to you at delivery will establish your eligibility under warranty and should be presented to your local Cessna Service Station at the time of warranty service.
- FACTORY TRAINED PERSONNEL to provide you with courteous, expert service.
- FACTORY APPROVED SERVICE EQUIPMENT to provide you efficient and accurate workmanship.
- A STOCK OF GENUINE CESSNA SERVICE PARTS are available when you need them.
- THE LATEST AUTHORITATIVE INFORMATION FOR SERVICING CESSNA AIRPLANES. Cessna Service Stations have all of the current Maintenance Manuals, Illustrated Parts Catalogs and various other support publications produced by Cessna Aircraft Company.

A current Cessna Service Station Directory accompanies your new airplane. The Directory is revised annually, and a current copy can be obtained from your nearest Cessna Service Station.

We urge all Cessna owners/operators to utilize the benefits available within the Cessna Organization.

PERFORMANCE - SPECIFICATIONS

*SPEED:		
Maximum at Sea Level		126 KNOTS
Cruise, 75% Power at 8500 FT		124 KNOTS
CRUISE: Recommended lean mixture with fuel allowance for engine start, taxi, takeoff, climb and 45 minutes reserve.		
75% Power at 8500 FT	Range	518 NM
53 Gallons Usable Fuel	Time	4.26 HRS
Range at 10,000 FT, 45% power	Range	638 NM
53 Gallons Usable Fuel	Time	6.72 HRS
RATE OF CLIMB AT SEA LEVEL		730 FPM
SERVICE CEILING		14,000 FT
TAKEOFF PERFORMANCE:		
Ground Roll		960 FT
Total Distance Over 50 FT Obstacle		1630 FT
LANDING PERFORMANCE:		
Ground Roll		575 FT
Total Distance Over 50 FT Obstacle		1335 FT
STALL SPEED:		
Flaps Up, Power Off		53 KCAS
Flaps Down, Power Off		48 KCAS
MAXIMUM WEIGHT:		
Ramp		2558 LBS
Takeoff		2550 LBS
Landing		2550 LBS
STANDARD EMPTY WEIGHT		1663 LBS
MAXIMUM USEFUL LOAD		895 LBS
BAGGAGE ALLOWANCE		120 LBS

PERFORMANCE-SPECIFICATIONS

(Continued)

WING LOADING: Lbs/Sq Ft	14.7
POWER LOADING Lbs/HP	14.2
FUEL CAPACITY	56 GAL
OIL CAPACITY	8 QTS
ENGINE: Textron Lycoming IO-360-L2A 180 BHP at 2700 RPM	
PROPELLER: Fixed Pitch, Diameter	76 IN.

*** NOTE**

Speed performance is shown for an airplane equipped with speed fairings which increase the speeds by approximately 2 knots. There is a corresponding difference in range, while all other performance figures are unchanged when speed fairings are installed.

The above performance figures are based on airplane weights at 2550 pounds, standard atmospheric conditions, level, hard-surfaced dry runways and no wind. They are calculated values derived from flight tests conducted by The Cessna Aircraft Company under carefully documented conditions and will vary with individual airplanes and numerous factors affecting flight performance.

COVERAGE

The Pilot's Operating Handbook in the airplane at the time of delivery from The Cessna Aircraft Company contains information applicable to the Model 172S airplane by serial number and registration number shown on the Title Page. This handbook is applicable to airplane serial number 172S8001 and On. All information is based on data available at the time of publication.

This handbook consists of nine sections that cover all operational aspects of a standard-equipped airplane. Following Section 8 are the Supplements, Section 9, which provide expanded operational procedures for the avionics equipment (both standard and optional), and provides information on special operations.

Supplements are individual documents, and may be issued or revised without regard to revision dates which apply to the POH itself. These supplements contain a Log of Effective Pages, which should be used to determine the status of each supplement.

ORIGINAL ISSUE AND REVISIONS

This Pilot's Operating Handbook and FAA Approved Airplane Flight Manual is comprised of the original issue and any subsequent revisions. To ensure that information in this manual is current, the revisions must be incorporated as they are issued. This manual was originally issued on July 8, 1998. As revisions are issued, they will be noted in the Log of Effective Pages table.

The part number of this manual has also been designed to further aid the owner/operator in determining the revision level of any POH. Refer to the example below for a breakdown:

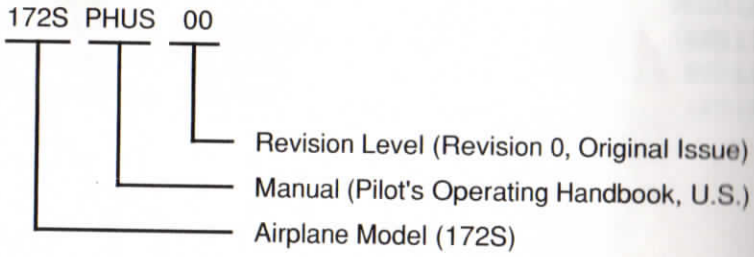

It is the responsibility of the owner to maintain this handbook in a current status when it is being used for operational purposes. Owners should contact their local Cessna Service Station whenever the revision status of their handbook is in question.

Revisions are distributed to owners of U.S. Registered aircraft according to FAA records at the time of revision issuance, and to Internationally Registered aircraft according to Cessna Owner Advisory records at the time of issuance. Revisions should be read carefully upon receipt and incorporated in this POH.

REVISION FILING INSTRUCTIONS

REGULAR REVISIONS

Pages to be removed or inserted in the Pilots' Operating Handbook and FAA Approved Airplane Flight Manual are determined by the Log of Effective Pages located in this section. This log contains the page number and date of issue for each page within the POH. At original issue, all pages will contain the same date. As revisions to the POH occur, these dates will change on effected pages. When two pages display the same page number, the page with the latest date shall be inserted into the POH. The date on the Log Of Effective Pages shall also agree with the latest date of the page in question.

TEMPORARY REVISIONS

Under limited circumstances, temporary revisions to the POH may be issued. These temporary revisions are to be filed in the applicable section in accordance with filing instructions appearing on the first page of the temporary revision.

The recession of a temporary revision is accomplished by incorporation into the POH at revision time or by a superseding temporary revision. In order to accurately track the status of temporary revisions as they pertain to a POH, a Temporary Revision List will be located previous to this section when required. This list will indicate the date the temporary revision was incorporated into the POH, thus authorizing the recession of the temporary revision.

IDENTIFYING REVISED MATERIAL

Additions or revisions to the text in an existing section will be identified by a vertical line (revision bar) adjacent to the applicable revised area on the outer margin of the page.

When technical changes cause unchanged text to appear on a different page, a revision bar will be placed in the outer lower margin of the page, opposite the page number and date of the page, providing no other revision bar appears on the page. These pages will display the current revision date as found in the Original Issue and Revisions paragraph of this section.

When extensive technical changes are made to text in an existing section that requires extensive revision, revision bars will appear the full length of text.

New art added to an existing section will be identified by a single pointing hand indicator adjacent to the figure title and figure number. Existing art which is revised will have a pointing hand adjacent to the portion of the art which has changed.

WARNINGS, CAUTIONS AND NOTES

Throughout the text, warnings, cautions and notes pertaining to airplane handling and operations are utilized. These adjuncts to the text are used to highlight or emphasize important points.

WARNING - Calls attention to use of methods, procedures or limits which must be followed precisely to avoid injury or death to persons.

CAUTION - Calls attention to methods, procedures or limits which must be followed to avoid damage to equipment.

NOTE - Calls attention to additional procedures or information pertaining to the text.

LOG OF EFFECTIVE PAGES

The following Log of Effective Pages provides the date of issue for original and revised pages, as well as a listing of all pages in the POH. Pages which are affected by the current revision will be preceeded by an asterisk with the revision level.

Revision Level	Date of Issue	Revision Level	Date of Issue
0 (Original Issue)	July 8, 1998	3	Mar 2, 2001
1	May 30, 2000	4	Aug 12, 2003
2	Dec 30, 2000	5	July 19, 2004

PAGE	DATE	PAGE	DATE
Title	July 8/98	1-21	May 30/00
Assignment Record	July 8/98	1-22	July 8/98
* i/ii	Revision 5	1-23	May 30/00
iii	May 30/00	1-24	July 8/98
iv	Revision 4	1-25	Revision 4
v	Revision 4	1-26	Revision 4
vi	May 30/00	1-27/1-28	Revision 4
vii	May 30/00	2-1/2-2	Revision 4
viii	July 8/98	2-3	May 30/00
* ix	Revision 5	2-4	July 8/98
* x	Revision 5	2-5	Revision 4
* xi	Revision 5	2-6	Revision 4
* xii	Revision 5	2-7	July 8/98
xiii/xiv	Revision 4	2-8	July 8/98
1-1	Revision 4	2-9	July 8/98
1-2	Revision 4	2-10	Revision 4
1-3	Revision 4	2-11	July 8/98
1-4	Revision 4	2-12	Revision 4
1-5	Revision 4	2-13	July 8/98
1-6	Revision 4	2-14	Revision 4
1-7	Revision 4	2-15/2-16	Revision 4
1-8	Revision 4	3-1	Revision 4
1-9	Revision 4	3-2	Revision 4
1-10	Revision 4	3-3	May 30/00
1-11	July 8/98	3-4	Revision 4
1-12	July 8/98	3-5	Revision 4
1-13	May 30/00	3-6	Revision 4
1-14	July 8/98	3-7	Revision 4
1-15	Revision 4	3-8	Revision 4
1-16	May 30/00	3-9	Revision 4
1-17	Revision 4	3-10	May 30/00
1-18	May 30/00		
1-19	Revision 4		
1-20	Revision 4		

LOG OF EFFECTIVE PAGES
(Continued)

PAGE	DATE
3-11	Revision 4
3-12	Revision 4
3-13	July 8/98
3-14	Revision 4
3-15	Revision 4
3-16	Revision 4
3-17	Revision 4
3-18	Revision 4
3-19	Revision 4
3-20	Revision 4
3-21	Revision 4
3-22	Revision 4
3-23/3-24	Revision 4
4-1	Revision 4
4-2	Revision 4
4-3/4-4	Revision 4
4-5	May 30/00
4-6	May 30/00
4-7	Revision 4
4-8	Revision 4
4-9	Revision 4
4-10	Revision 4
4-11	Revision 4
4-12	Revision 4
4-13	Revision 4
4-14	Revision 4
4-15	Revision 4
4-16	Revision 4
4-17	Revision 4
4-18	May 30/00
4-19	Revision 4
4-20	Revision 4
4-21	Revision 4
4-22	Revision 4
4-23	Revision 4
4-24	Revision 4
4-25	Revision 4
4-26	Revision 4
4-27	Revision 4
4-28	Revision 4
4-29	Revision 4
4-30	Revision 4
4-31	Revision 4
4-32	Revision 4
4-33	Revision 4
4-34	Revision 4
4-35	Revision 4
4-36	Revision 4
5-1/5-2	Revision 4
5-3	July 8/98
5-4	July 8/98
5-5	Revision 4
5-6	Revision 4
5-7	July 8/98
5-8	July 8/98
5-9	July 8/98
5-10	July 8/98
5-11	July 8/98
5-12	July 8/98
5-13	Revision 4
5-14	July 8/98
5-15	July 8/98
5-16	July 8/98
5-17	July 8/98
5-18	July 8/98
5-19	July 8/98
5-20	July 8/98
5-21	July 8/98
5-22	July 8/98
5-23/5-24	Revision 4
6-1/6-2	Revision 4
6-3	Revision 4
6-4	July 8/98
6-5	July 8/98
6-6	Revision 4
6-7	July 8/98
6-8	July 8/98
6-9	July 8/98
6-10	May 30/00
6-11	July 8/98
6-12	May 30/00
6-13	July 8/98
6-14	July 8/98
6-15	July 8/98

LOG OF EFFECTIVE PAGES
(Continued)

PAGE	DATE
6-16	May 30/00
6-17	July 8/98
6-18	May 30/00
6-19	May 30/00
6-20	May 30/00
6-21	May 30/00
6-22	May 30/00
6-23	May 30/00
6-24	May 30/00
6-25/6-26	Revision 4
7-1	May 30/00
7-2	May 30/00
7-3/7-4	Revision 4
7-5	May 30/00
7-6	July 8/98
7-7	July 8/98
7-8	July 8/98
7-9	Revision 4
7-10	Revision 4
7-11	Revision 4
7-12	Revision 4
7-13	Revision 4
7-14	May 30/00
7-15	May 30/00
7-16	May 30/00
7-17	May 30/00
7-18	May 30/00
7-19	Revision 4
7-20	Revision 4
7-21	Revision 4
7-22	May 30/00
7-23	Revision 4
* 7-24	Revision 5
7-25	Revision 4
7-26	July 8/98
7-27/7-27A	Revision 4
* 7-27B	Revision 5
7-28	July 8/98
7-29	May 30/00
7-30	Dec 30/00
7-30A	Dec 30/00
7-30B	Dec 30/00
7-31	Dec 30/00
7-32	Revision 4
7-33	Revision 4
7-34	Revision 4
7-35	Revision 4
7-36	Revision 4
7-37	July 8/98
7-38	Revision 4
7-39	Revision 4
7-40	July 8/98
7-41	July 8/98
7-42	July 8/98
7-43	Revision 4
7-44	July 8/98
7-45	Revision 4
7-46	May 30/00
7-47	Revision 4
7-48	July 8/98
7-49	May 30/00
7-50	July 8/98
8-1	May 30/00
8-2	May 30/00
8-3	May 30/00
8-4	Revision 4
8-5	Revision 4
8-6	Revision 4
8-7	May 30/00
8-8	May 30/00
8-9	May 30/00
8-10	May 30/00
8-11	May 30/00
8-12	May 30/00
8-13	May 30/00
8-14	Revision 4
8-15	Revision 4
8-16	May 30/00
8-17	May 30/00
8-18	May 30/00
8-19	May 30/00

LOG OF EFFECTIVE PAGES
(Continued)

PAGE	DATE
8-20	Revision 4
8-21	May 30/00
8-22	May 30/00
8-23	Revision 4
8-24	Revision 4
9-1/9-2	May 30/00

APPROVED BY

FAA APPROVED UNDER 14 CFR PART 21 SUBPART J
Cessna Aircraft Co.
Delegation Option Authorization DOA 210004-CE

DATE OF APPROVAL 07-19-04

TABLE OF CONTENTS

	SECTION
GENERAL	1
LIMITATIONS	2
EMERGENCY PROCEDURES	3
NORMAL PROCEDURES	4
PERFORMANCE	5
WEIGHT & BALANCE/EQUIPMENT LIST	6
AIRPLANE & SYSTEMS DESCRIPTION	7
HANDLING, SERVICE & MAINTENANCE	8
SUPPLEMENTS	9

SECTION 1
GENERAL

TABLE OF CONTENTS

Page

Three View - Normal Ground Attitude 1-2
Introduction 1-4
Descriptive Data 1-4
- Engine 1-4
- Propeller 1-4
- Fuel 1-4
- Oil 1-5
- Maximum Certificated Weights 1-6
- Standard Airplane Weights 1-7
- Cabin And Entry Dimensions 1-7
- Baggage Space And Entry Dimensions 1-7
- Specific Loadings 1-7

Symbols, Abbreviations and Terminology 1-8
- General Airspeed Terminology And Symbols 1-8
- Meteorological Terminology 1-9
- Engine Power Terminology 1-9
- Airplane Performance And Flight Planning Terminology .. 1-10
- Weight And Balance Terminology 1-11

Metric / Imperial / U.S. Conversion Charts 1-13
- Weight Conversions 1-14
- Length Conversions 1-16
- Distance Conversions 1-20
- Volume Conversions 1-21
- Temperature Conversions 1-24
- Hectopascals to Inches Mercury 1-25
- Volume to Weight Conversions 1-26
- Quick Conversions 1-27/1-28

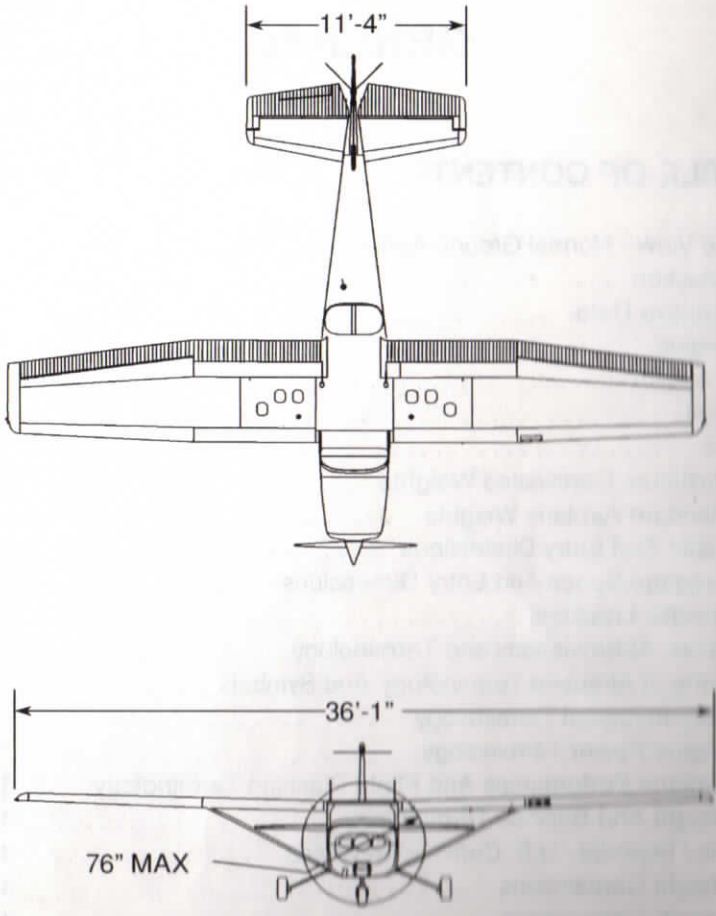

0510T1005

Figure 1-1. Three View - Normal Ground Attitude (Sheet 1 of 2)

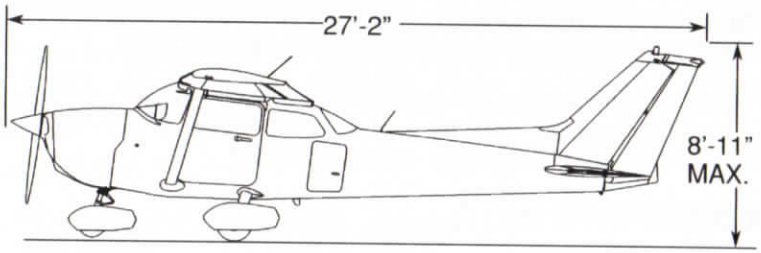

NOTE 1: WING SPAN SHOWN WITH STROBE LIGHTS INSTALLED.

NOTE 2: WHEEL BASE LENGTH IS 65".

NOTE 3: PROPELLER GROUND CLEARANCE IS 11 1/4".

NOTE 4: WING AREA IS 174 SQUARE FEET.

NOTE 5: MINIMUM TURNING RADIUS (* PIVOT POINT TO OUTBOARD WING TIP) IS 27'-5 1/2".

NOTE 6: NORMAL GROUND ATTITUDE IS SHOWN WITH NOSE STRUT SHOWING APPROXIMATELY 2" OF STRUT, AND WINGS LEVEL.

0510T1005

Figure 1-1. Three View - Normal Ground Attitude (Sheet 2)

INTRODUCTION

This handbook contains 9 sections, and includes the material required to be furnished to the pilot by FAR Part 23. It also contains supplemental data supplied by Cessna Aircraft Company.

Section 1 provides basic data and information of general interest. It also contains definitions or explanations of symbols, abbreviations, and terminology commonly used.

DESCRIPTIVE DATA

ENGINE

Number of Engines: 1.
Engine Manufacturer: Textron Lycoming.
Engine Model Number: IO-360-L2A.
Engine Type: Normally aspirated, direct drive, air-cooled, horizontally opposed, fuel injected, four cylinder engine with 360 cu. in. displacement.
Horsepower Rating and Engine Speed: 180 rated BHP at 2700 RPM.

PROPELLER

Propeller Manufacturer: McCauley Propeller Systems.
Propeller Model Number: 1A170E/JHA7660.
Number of Blades: 2.
Propeller Diameter: 76 inches.
Propeller Type: Fixed pitch.

FUEL

⚠ WARNING

USE OF UNAPPROVED FUELS MAY RESULT IN DAMAGE TO THE ENGINE AND FUEL SYSTEM COMPONENTS, RESULTING IN POSSIBLE ENGINE FAILURE.

Approved Fuel Grades (and Colors):
100LL Grade Aviation Fuel (Blue).
100 Grade Aviation Fuel (Green).

NOTE

Isopropyl alcohol or diethylene glycol monomethyl ether (DiEGME) may be added to the fuel supply. Additive concentrations shall not exceed 1% for isopropyl alcohol or 0.10% to 0.15% for DiEGME. Refer to Section 8 for additional information.

Fuel Capacity:

Total Capacity:	56.0 U.S. gallons.
Total Usable:	53.0 U.S. gallons.
Total Capacity Each Tank:	28.0 U.S. gallons.
Total Usable Each Tank:	26.5 U.S. gallons.

NOTE

To ensure maximum fuel capacity and minimize cross-feeding when refueling, always park the airplane in a wings-level, normal ground attitude and place the fuel selector in the Left or Right position. Refer to Figure 1-1 for normal ground attitude dimensions.

OIL

Oil Specification:

MIL-L-6082 or SAE J1966 Aviation Grade Straight Mineral Oil: Used when the airplane was delivered from the factory and should be used to replenish the supply during the first 25 hours. This oil should be drained and the filter changed after the first 25 hours of operation. Refill the engine with MIL-L-6082 or SAE J1966 Aviation Grade Straight Mineral Oil and continue to use until a total of 50 hours has accumulated or oil consumption has stabilized.

MIL-L-22851 or SAE J1899 Aviation Grade Ashless Dispersant Oil: Oil conforming to the latest revision and/or supplements to Textron Lycoming Service Instruction No. 1014, **must be used** after first 50 hours or once oil consumption has stabilized.

Recommended Viscosity for Temperature Range:

Temperature	MIL-L-6082 or SAE J1966 Straight Mineral Oil SAE Grade	MIL-L-22851 or SAE J1899 Ashless Dispersant SAE Grade
Above 27°C (80°F)	60	15W-50, 20W-50 or 60
Above 16°C (60°F)	50	40 or 50
-1°C (30°F) to 32°C (90°F)	40	40
-18°C (0°F) to 21°C (70°F)	30	30, 40 or 20W-40
Below -12°C (10°F)	20	30 or 20W-30
-18°C (0°F) to 32°C (90°F)	20W-50	20W-50 or 15W-50
All Temperatures	---	15W-50 or 20W-50

NOTE

When operating temperatures overlap, use the lighter grade of oil.

Oil Capacity:
Sump: 8 U.S. Quarts
Total: 9 U.S. Quarts

MAXIMUM CERTIFICATED WEIGHTS

Ramp Weight	Normal Category:	2558 lbs.
	Utility Category:	2208 lbs.
Takeoff Weight	Normal Category:	2550 lbs.
	Utility Category:	2200 lbs.
Landing Weight	Normal Category:	2550 lbs.
	Utility Category:	2200 lbs.

Weight in Baggage Compartment, Normal Category:

Baggage Area 1 (Station 82 to 108): 120 lbs. See note below.
Baggage Area 2 (Station 108 to 142): 50 lbs. See note below.

NOTE

The maximum combined weight capacity for Baggage Area 1 and Baggage Area 2 is 120 lbs.

Weight in Baggage Compartment, Utility Category:

In this category, the rear seat must not be occupied and the baggage compartment must be empty.

STANDARD AIRPLANE WEIGHTS

Standard Empty Weight:	1663 lbs.
Maximum Useful Load, Normal Category	895 lbs.
Maximum Useful Load, Utility Category:	545 lbs.

CABIN AND ENTRY DIMENSIONS

Detailed dimensions of the cabin interior and entry door openings are illustrated in Section 6.

BAGGAGE SPACE AND ENTRY DIMENSIONS

Dimensions of the baggage area and baggage door opening are illustrated in detail in Section 6.

SPECIFIC LOADINGS

Wing Loading:	14.7 lbs./sq. ft.
Power Loading:	14.2 lbs./hp.

SYMBOLS, ABBREVIATIONS AND TERMINOLOGY

GENERAL AIRSPEED TERMINOLOGY AND SYMBOLS

KCAS	**Knots Calibrated Airspeed** is indicated airspeed corrected for position and instrument error and expressed in knots. Knots calibrated airspeed is equal to KTAS in standard atmosphere at sea level.
KIAS	**Knots Indicated Airspeed** is the speed shown on the airspeed indicator and expressed in knots.
KTAS	**Knots True Airspeed** is the airspeed expressed in knots relative to undisturbed air which is KCAS corrected for altitude and temperature.
V_A	**Maneuvering Speed** is the maximum speed at which full or abrupt control movements may be used without overstressing the airframe.
V_{FE}	**Maximum Flap Extended Speed** is the highest speed permissible with wing flaps in a prescribed extended position.
V_{NO}	**Maximum Structural Cruising Speed** is the speed that should not be exceeded except in smooth air, then only with caution.
V_{NE}	**Never Exceed Speed** is the speed limit that may not be exceeded at any time.
V_S	**Stalling Speed or the minimum steady flight speed** is the minimum speed at which the airplane is controllable.
V_{SO}	**Stalling Speed or the minimum steady flight speed** is the minimum speed at which the airplane is controllable in the landing configuration at the most forward center of gravity.
V_X	**Best Angle-of-Climb Speed** is the speed which results in the greatest gain of altitude in a given horizontal distance.
V_Y	**Best Rate-of-Climb Speed** is the speed which results in the greatest gain in altitude in a given time.

METEOROLOGICAL TERMINOLOGY

OAT	**Outside Air Temperature** is the free air static temperature. It may be expressed in either degrees Celsius or degrees Fahrenheit.
Standard Temperature	**Standard Temperature** is 15°C at sea level pressure altitude and decreases by 2°C for each 1000 feet of altitude.
Pressure Altitude	**Pressure Altitude** is the altitude read from an altimeter when the altimeter's barometric scale has been set to 29.92 inches of mercury (1013 mb).

ENGINE POWER TERMINOLOGY

BHP	**Brake Horsepower** is the power developed by the engine.
RPM	**Revolutions Per Minute** is engine speed.
Static RPM	**Static RPM** is engine speed attained during a full throttle engine runup when the airplane is on the ground and stationary.
MAP	**Manifold Absolute Pressure** is the absolute pressure measured in the engine induction system. MAP is measured in units of inches of mercury (inHG).
Lean Mixture	Decreased proportion of fuel in the fuel-air mixture supplied to the engine. As air density decreases, the amount of fuel required by the engine decreases for a given throttle setting. Adjusting the fuel-air mixture to provide a smaller portion of fuel is known as "leaning" the mixture.
Rich Mixture	Increased proportion of fuel in the fuel-air mixture supplied to the engine. As air density increases, the amount of fuel required by the engine increases for a given throttle setting. Adjusting the fuel-air mixture to provide a greater portion of fuel is known as "richening" the mixture.
Full Rich	Mixture control full forward (pushed in, full control travel, toward the panel).
Idle Cutoff	Mixture control full aft (pulled out, full control travel, away from the panel).

ENGINE POWER TERMINOLOGY (Continued)

Full Throttle	Throttle full forward (pushed in, full control travel, toward the panel) Also known as "full open" throttle.
Closed Throttle	Throttle full aft (pulled out, full control travel, away from the panel). Also known as the throttle "idle" position.

AIRPLANE PERFORMANCE AND FLIGHT PLANNING TERMINOLOGY

Demonstrated Crosswind Velocity	**Demonstrated Crosswind Velocity** is the velocity of the crosswind component for which adequate control of the airplane during takeoff and landing was actually demonstrated during certification tests. The value shown is not considered to be limiting.
Usable Fuel	**Usable Fuel** is the fuel available for flight planning.
Unusable Fuel	**Unusable Fuel** is the quantity of fuel that can not be safely used in flight.
GPH	**Gallons Per Hour** is the amount of fuel consumed per hour.
NMPG	**Nautical Miles Per Gallon** is the distance which can be expected per gallon of fuel consumed at a specific engine power setting and/or flight configuration.
g	**g** is acceleration due to gravity.
Course Datum	**Course Datum** is the compass reference used by the autopilot, along with course deviation, to provide lateral control when tracking a navigation signal.

WEIGHT AND BALANCE TERMINOLOGY

Reference Datum	**Reference Datum** is an imaginary vertical plane from which all horizontal distances are measured for balance purposes.
Station	**Station** is a location along the airplane fuselage given in terms of the distance from the reference datum.
Arm	**Arm** is the horizontal distance from the reference datum to the center of gravity (C.G.) of an item.
Moment	**Moment** is the product of the weight of an item multiplied by its arm. (Moment divided by the constant 1000 is used in this handbook to simplify balance calculations by reducing the number of digits.)
Center of Gravity (C.G.)	**Center of Gravity** is the point at which an airplane, or equipment, would balance if suspended. Its distance from the reference datum is found by dividing the total moment by the total weight of the airplane.
C.G. Arm	**Center of Gravity Arm** is the arm obtained by adding the airplane's individual moments and dividing the sum by the total weight.
C.G. Limits	**Center of Gravity Limits** are the extreme center of gravity locations within which the airplane must be operated at a given weight.
Standard Empty Weight	**Standard Empty Weight** is the weight of a standard airplane, including unusable fuel, full operating fluids and full engine oil.
Basic Empty Weight	**Basic Empty Weight** is the standard empty weight plus the weight of optional equipment.
Useful Load	**Useful Load** is the difference between ramp weight and the basic empty weight.
MAC	**MAC (Mean Aerodynamic Chord)** is the chord of an imaginary rectangular airfoil having the same pitching moments throughout the flight range as that of the actual wing.

WEIGHT AND BALANCE TERMINOLOGY (Continued)

Maximum Ramp Weight	**Maximum Ramp Weight** is the maximum weight approved for ground maneuver, and includes the weight of fuel used for start, taxi and runup.
Maximum Takeoff Weight	**Maximum Takeoff Weight** is the maximum weight approved for the start of the takeoff roll.
Maximum Landing Weight	**Maximum Landing Weight** is the maximum weight approved for the landing touchdown.
Tare	**Tare** is the weight of chocks, blocks, stands, etc. used when weighing an airplane, and is included in the scale readings. Tare is deducted from the scale reading to obtain the actual (net) airplane weight.

METRIC / IMPERIAL / U.S. CONVERSION CHARTS

The following charts have been provided to help international operators convert U.S. measurement supplied with the Pilot's Operating Handbook into metric and imperial measurements.

The standard followed for measurement units shown, is the National Institute of Standards Technology (NIST), Publication 811, "Guide for the Use of the International System of Units (SI)."

Please refer to the following pages for these charts.

(Kilograms x 2.205 = Pounds) (Pounds x .454 = Kilograms)

KILOGRAMS INTO POUNDS
KILOGRAMMES EN LIVRES

kg	0	1	2	3	4	5	6	7	8	9
	lb.	lb.	lb.	lb.	lb.	lb.	lb.	lb.	lb.	lb.
0		2.205	4.409	6.614	8.819	11.023	13.228	15.432	17.637	19.842
10	22.046	24.251	26.456	28.660	30.865	33.069	35.274	37.479	39.683	41.888
20	44.093	46.297	48.502	50.706	52.911	55.116	57.320	59.525	61.729	63.934
30	66.139	68.343	70.548	72.753	74.957	77.162	79.366	81.571	83.776	85.980
40	88.185	90.390	92.594	94.799	97.003	99.208	101.41	103.62	105.82	108.03
50	110.23	112.44	114.64	116.85	119.05	121.25	123.46	125.66	127.87	130.07
60	132.28	134.48	136.69	138.89	141.10	143.30	145.51	147.71	149.91	152.12
70	154.32	156.53	158.73	160.94	163.14	165.35	167.55	169.76	171.96	174.17
80	176.37	178.57	180.78	182.98	185.19	187.39	189.60	191.80	194.01	196.21
90	198.42	200.62	202.83	205.03	207.24	209.44	211.64	213.85	216.05	218.26
100	220.46	222.67	224.87	227.08	229.28	231.49	233.69	235.90	238.10	240.30

POUNDS INTO KILOGRAMS
LIVRES EN KILOGRAMMES

lb.	0	1	2	3	4	5	6	7	8	9
	kg	kg	kg	kg	kg	kg	kg	kg	kg	kg
0		0.454	0.907	1.361	1.814	2.268	2.722	3.175	3.629	4.082
10	4.536	4.990	5.443	5.897	6.350	6.804	7.257	7.711	8.165	8.618
20	9.072	9.525	9.979	10.433	10.886	11.340	11.793	12.247	12.701	13.154
30	13.608	14.061	14.515	14.969	15.422	15.876	16.329	16.783	17.237	17.690
40	18.144	18.597	19.051	19.504	19.958	20.412	20.865	21.319	21.772	22.226
50	22.680	23.133	23.587	24.040	24.494	24.948	25.401	25.855	26.303	26.762
60	27.216	27.669	28.123	28.576	29.030	29.484	29.937	30.391	30.844	31.298
70	31.752	32.205	32.659	33.112	33.566	34.019	34.473	34.927	35.380	35.834
80	36.287	36.741	37.195	37.648	38.102	38.555	39.009	39.463	39.916	40.370
90	40.823	41.277	41.731	42.184	42.638	43.091	43.545	43.999	44.452	44.906
100	45.359	45.813	46.266	46.720	47.174	47.627	48.081	48.534	48.988	49.442

Figure 1-2. Weight Conversions (Sheet 1 of 2)

(Kilograms x 2.205 = Pounds) (Pounds x .454 = Kilograms)

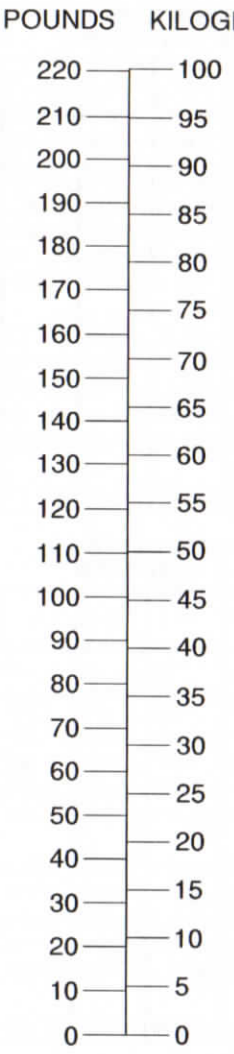

0585T1027

Figure 1-2 . Weight Conversions (Sheet 2)

(Meters × 3.281 = Feet) (Feet × .305 = Meters)

METERS INTO FEET
METRES EN PIEDS

m	0	1	2	3	4	5	6	7	8	9
	feet	feet	feet	feet	feet	feet	feet	feet	feet	feet
0	- - -	3.281	6.562	9.842	13.123	16.404	19.685	22.956	26.247	29.528
10	32.808	36.089	39.370	42.651	45.932	49.212	52.493	55.774	59.055	62.336
20	65.617	68.897	72.178	75.459	78.740	82.021	85.302	88.582	91.863	95.144
30	98.425	101.71	104.99	108.27	111.55	114.83	118.11	121.39	124.67	127.95
40	131.23	134.51	137.79	141.08	144.36	147.64	150.92	154.20	157.48	160.76
50	164.04	167.32	170.60	173.86	177.16	180.45	183.73	187.01	190.29	193.57
60	195.85	200.13	203.41	206.69	209.97	213.25	216.53	219.82	223.10	226.38
70	229.66	232.94	236.22	239.50	242.78	246.06	249.34	252.62	255.90	259.19
80	262.47	265.75	269.03	272.31	275.59	278.87	282.15	285.43	288.71	291.58
90	295.27	298.56	301.84	305.12	308.40	311.68	314.96	318.24	321.52	324.80
100	328.08	331.36	334.64	337.93	341.21	344.49	347.77	351.05	354.33	357.61

FEET INTO METERS
PIEDS EN METRES

ft	0	1	2	3	4	5	6	7	8	9
	m	m	m	m	m	m	m	m	m	m
0	- - -	0.305	0.610	0.914	1.219	1.524	1.829	2.134	2.438	2.743
10	3.048	3.353	3.658	3.962	4.267	4.572	4.877	5.182	5.486	5.791
20	6.096	6.401	6.706	7.010	7.315	7.620	7.925	8.230	8.534	8.839
30	9.144	9.449	9.754	10.058	10.363	10.668	10.973	11.278	11.582	11.887
40	12.192	12.497	12.802	13.106	13.411	13.716	14.021	14.326	14.630	14.935
50	15.240	15.545	15.850	16.154	16.459	16.754	17.069	17.374	17.678	17.983
60	18.288	18.593	18.898	19.202	19.507	19.812	20.117	20.422	20.726	21.031
70	21.336	21.641	21.946	22.250	22.555	22.860	23.165	23.470	23.774	24.079
80	24.384	24.689	24.994	25.298	25.603	25.908	26.213	26.518	26.822	27.127
90	27.432	27.737	28.042	28.346	28.651	28.956	29.261	29.566	29.870	30.175
100	30.480	30.785	31.090	31.394	31.699	32.004	32.309	32.614	32.918	33.223

Figure 1-3. Length Conversions (Sheet 1 of 2)

(Meters × 3.281 = Feet) (Feet × .305 = Meters)

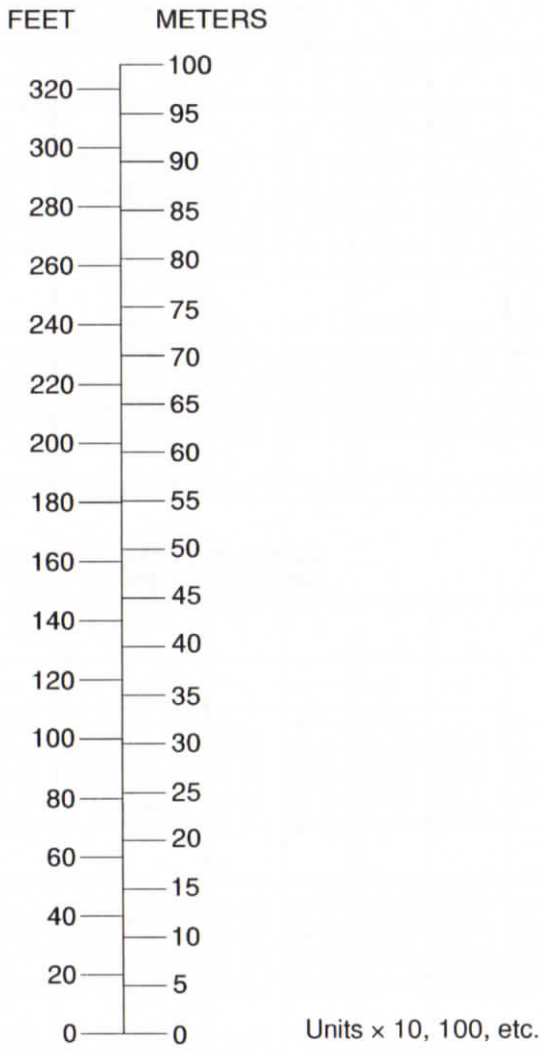

Figure 1-3 . Length Conversions (Sheet 2)

(Centimeters × .394 = Inches) (Inches × 2.54 = Centimeters)

CENTIMETERS INTO INCHES
CENTIMETRES EN POUCES

cm	0	1	2	3	4	5	6	7	8	9
	in.	in.	in.	in.	in.	in.	in.	in.	in.	in.
0	- - -	0.394	0.787	1.181	1.575	1.969	2.362	2.756	3.150	3.543
10	3.937	4.331	4.724	5.118	5.512	5.906	6.299	6.693	7.087	7.480
20	7.874	8.268	8.661	9.055	9.449	9.843	10.236	10.630	11.024	11.417
30	11.811	12.205	12.598	12.992	13.386	13.780	14.173	14.567	14.961	15.354
40	15.748	16.142	16.535	16.929	17.323	17.717	18.110	18.504	18.898	19.291
50	19.685	20.079	20.472	20.866	21.260	21.654	22.047	22.441	22.835	23.228
60	23.622	24.016	24.409	24.803	25.197	25.591	25.984	26.378	26.772	27.164
70	27.559	27.953	28.346	28.740	29.134	29.528	29.921	30.315	30.709	31.102
80	31.496	31.890	32.283	32.677	33.071	33.465	33.858	34.252	34.646	35.039
90	35.433	35.827	36.220	36.614	37.008	37.402	37.795	38.189	38.583	38.976
100	39.370	39.764	40.157	40.551	40.945	41.339	41.732	42.126	42.520	42.913

INCHES INTO CENTIMETERS
POUCES EN CENTIMETRES

in.	0	1	2	3	4	5	6	7	8	9
	cm	cm	cm	cm	cm	cm	cm	cm	cm	cm
0	- - -	2.54	5.08	7.62	10.16	12.70	15.24	17.78	20.32	22.96
10	25.40	27.94	30.48	33.02	35.56	38.10	40.64	43.18	45.72	48.26
20	50.80	53.34	55.88	58.42	60.96	63.50	66.04	68.58	71.12	73.66
30	76.20	78.74	81.28	83.82	86.36	88.90	91.44	93.98	96.52	99.06
40	101.60	104.14	106.68	109.22	111.76	114.30	116.84	119.38	121.92	124.46
50	127.00	129.54	132.08	134.62	137.16	139.70	142.24	144.78	147.32	149.86
60	152.40	154.94	157.48	160.02	162.56	165.10	167.64	170.18	172.72	175.26
70	177.80	180.34	182.88	185.42	187.96	190.50	193.04	195.58	198.12	200.66
80	203.20	205.74	208.28	210.82	213.36	215.90	218.44	220.98	223.52	226.06
90	228.60	231.14	233.68	236.22	238.76	241.30	243.84	246.38	248.92	251.46
100	254.00	256.54	259.08	261.62	264.16	266.70	269.24	271.78	274.32	276.86

Figure 1-4. Length Conversions (Sheet 1 of 2)

(Centimeters × .394 = Inches) (Inches × 2.54 = Centimeters)

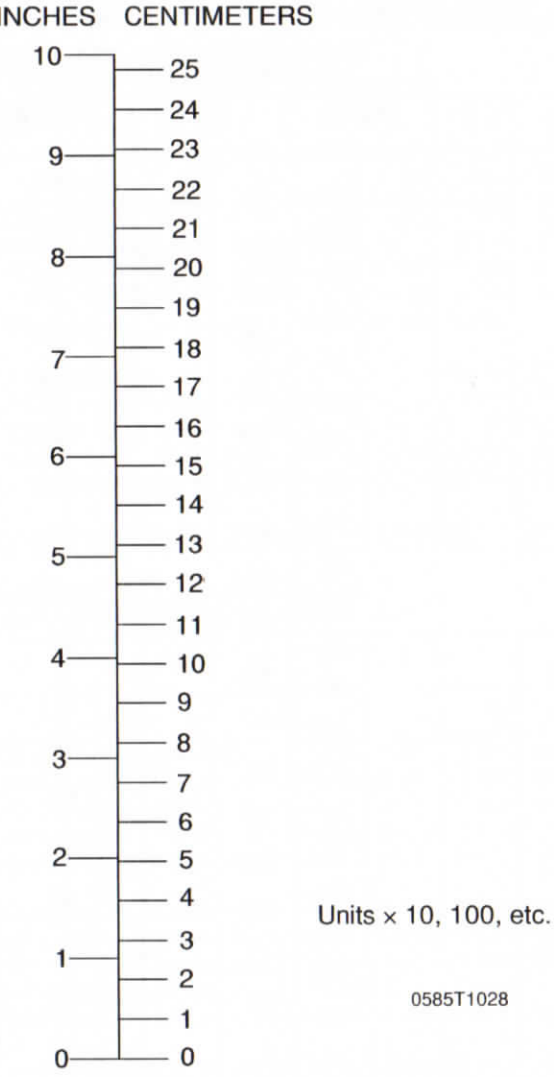

Figure 1-4. Length Conversions (Sheet 2)

(Statute Miles ×1.609=Kilometers) (Kilometers ×.622=Statute Miles)
(Statute Miles ×.869=Nautical Miles) (Nautical Miles ×1.15=Statute Miles)
(Nautical Miles ×1.852=Kilometers) (Kilometers ×.54=Nautical Miles)

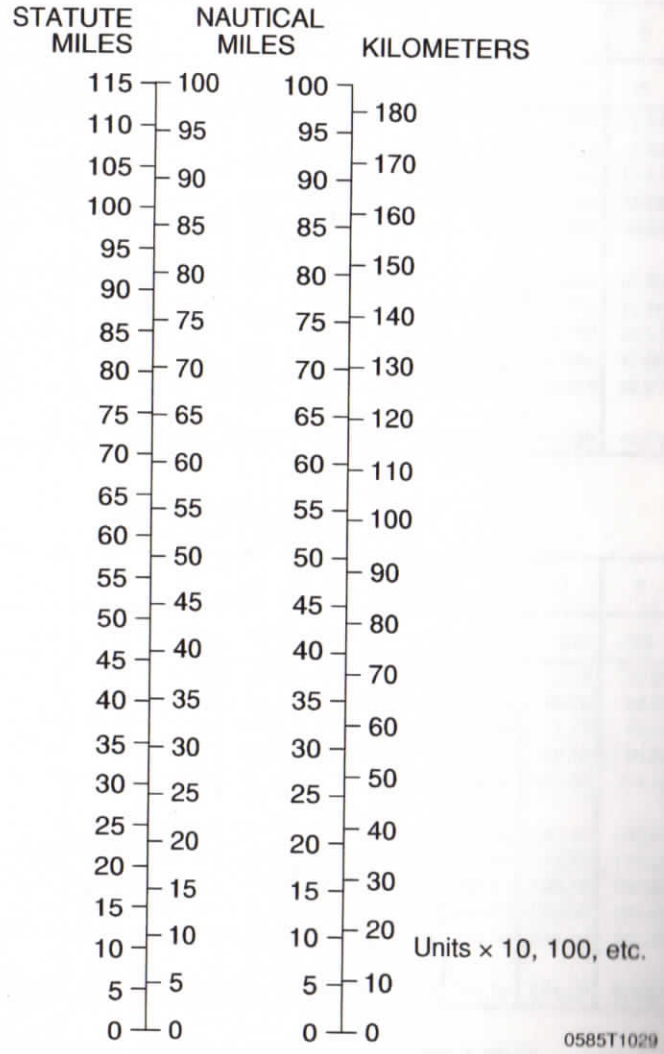

Figure 1-5. Distance Conversions

(Imperial Gallons × 4.546 = Liters) (Liters × .22 = Imperial Gallons)

LITERS INTO IMPERIAL GALLONS
LITRES EN GALLONS IMPERIAL

Lt	0	1	2	3	4	5	6	7	8	9
	IG	IG	IG	IG	IG	IG	IG	IG	IG	IG
0	- - -	0.220	0.440	0.660	0.880	1.100	1.320	1.540	1.760	1.980
10	2.200	2.420	2.640	2.860	3.080	3.300	3.520	3.740	3.960	4.180
20	4.400	4.620	4.840	5.059	5.279	5.499	5.719	5.939	6.159	6.379
30	6.599	6.819	7.039	7.259	7.479	7.699	7.919	8.139	8.359	8.579
40	8.799	9.019	9.239	9.459	9.679	9.899	10.119	10.339	10.559	10.779
50	10.999	11.219	11.439	11.659	11.879	12.099	12.319	12.539	12.759	12.979
60	13.199	13.419	13.639	13.859	14.078	14.298	14.518	14.738	14.958	15.178
70	15.398	15.618	15.838	16.058	16.278	16.498	16.718	16.938	17.158	17.378
80	17.598	17.818	18.038	18.258	18.478	18.698	18.918	19.138	19.358	19.578
90	19.798	20.018	20.238	20.458	20.678	20.898	21.118	21.338	21.558	21.778
100	21.998	22.218	22.438	22.658	22.878	23.098	23.318	23.537	23.757	23.977

IMPERIAL GALLONS INTO LITERS
GALLONS IMPERIAL EN LITRES

IG	0	1	2	3	4	5	6	7	8	9
	Lt	Lt	Lt	Lt	Lt	Lt	Lt	Lt	Lt	Lt
0	- - -	4.546	9.092	13.638	18.184	22.730	27.276	31.822	36.368	40.914
10	45.460	50.006	54.552	59.097	63.643	68.189	72.735	77.281	81.827	86.373
20	90.919	95.465	100.01	104.56	109.10	113.65	118.20	122.74	127.29	131.83
30	136.38	140.93	145.47	150.02	154.56	159.11	163.66	168.20	172.75	177.29
40	181.84	186.38	190.93	195.48	200.02	204.57	209.11	213.66	218.21	222.75
50	227.30	231.84	236.39	240.94	245.48	250.03	254.57	259.12	263.67	268.21
60	272.76	277.30	281.85	286.40	290.94	295.49	300.03	304.58	309.13	313.67
70	318.22	322.76	327.31	331.86	336.40	340.95	345.49	350.04	354.59	359.13
80	363.68	368.22	372.77	377.32	381.86	386.41	390.95	395.50	400.04	404.59
90	409.14	413.68	418.23	422.77	427.32	431.87	436.41	440.96	445.50	450.05
100	454.60	459.14	463.69	468.23	472.78	477.33	481.87	486.42	490.96	495.51

Figure 1-6. Volume Conversions (Sheet 1 of 3)

(Imperial Gallons × 4.4546 = Litres)
(Litres × .22 = Imperial Gallons)

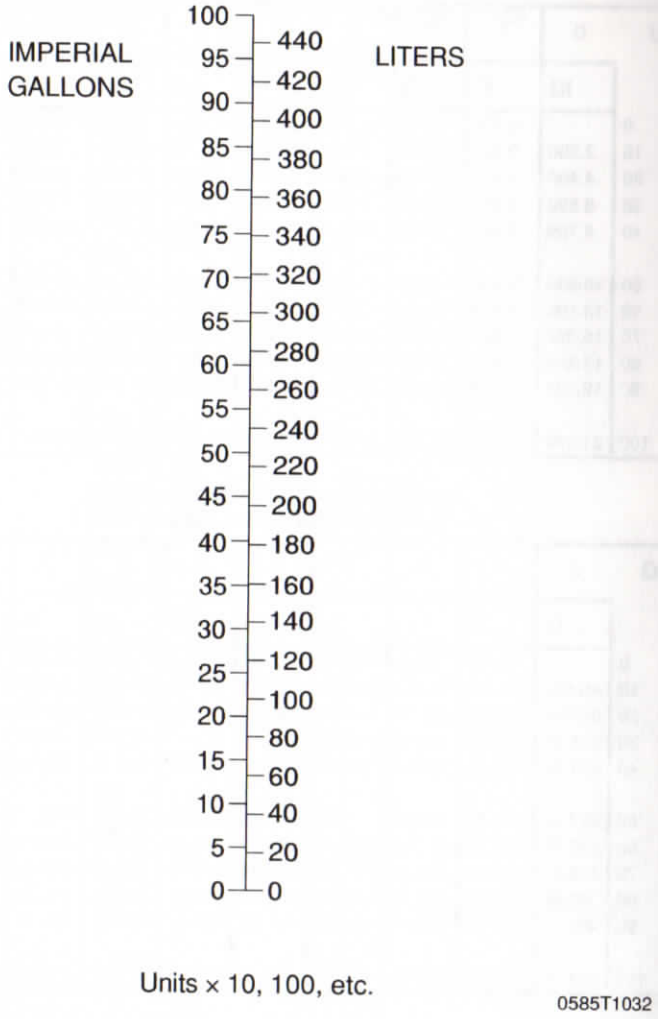

Figure 1-6. Volume Conversions (Sheet 2 of 3)

(Imperial Gallons × 1.2 = U.S. Gallons)
(U.S. Gallons × .833 = Imperial Gallons)
(U.S. Gallons × 3.785 = Liters)
(Liters × .264 = U.S. Gallons)

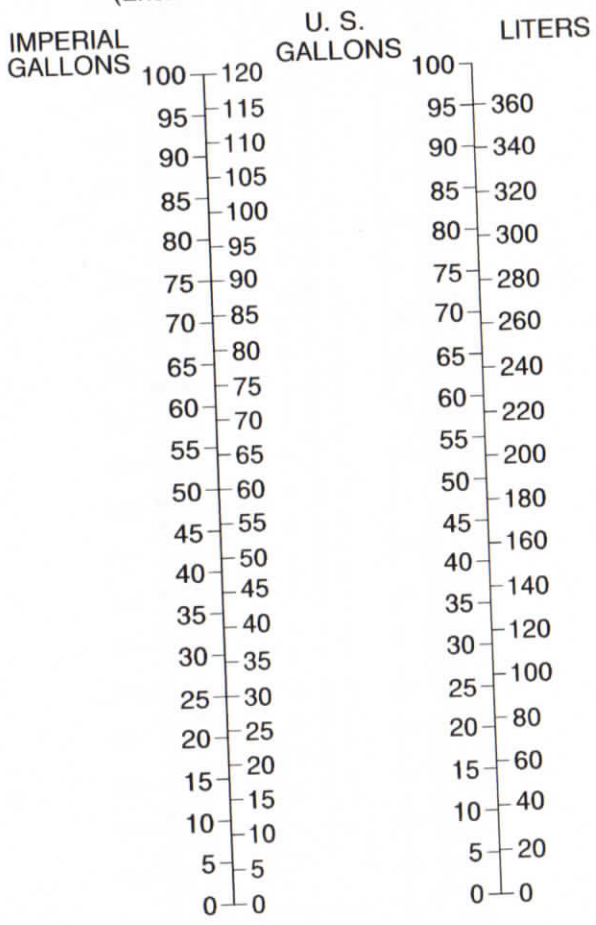

Figure 1-6. Volume Conversions (Sheet 3 of 3)

TEMPERATURE CONVERSIONS

(°F-32) × 5/9 = °C °C × 9/5 + 32 = °F

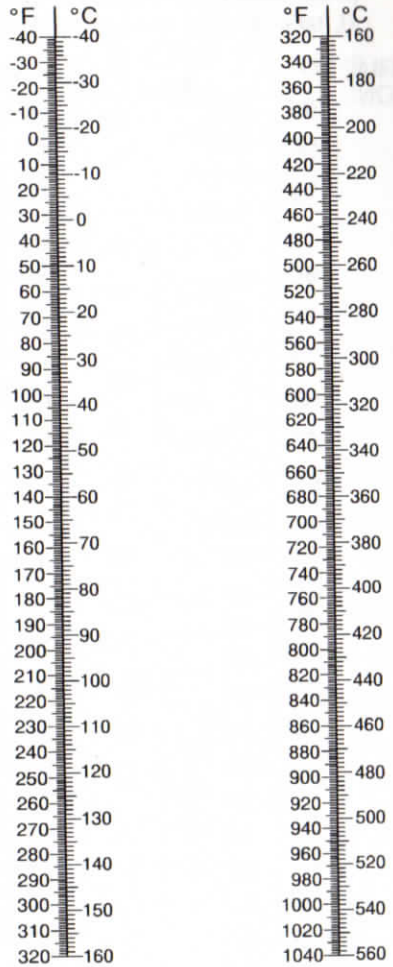

0585T1034

Figure 1-7. Temperature Conversions

PRESSURE CONVERSION
HECTOPASCALS (MILLIBARS) TO INCHES MERCURY (inHG)



Figure 1-8. Hectopascals to Inches Mercury

AVGAS Specific Gravity = .72

(Liters X .72 = Kilograms) - (Kilograms X 1.389 = Liters)

(Liters X 1.58 = Pounds) - (Pounds X .633 = Liters)

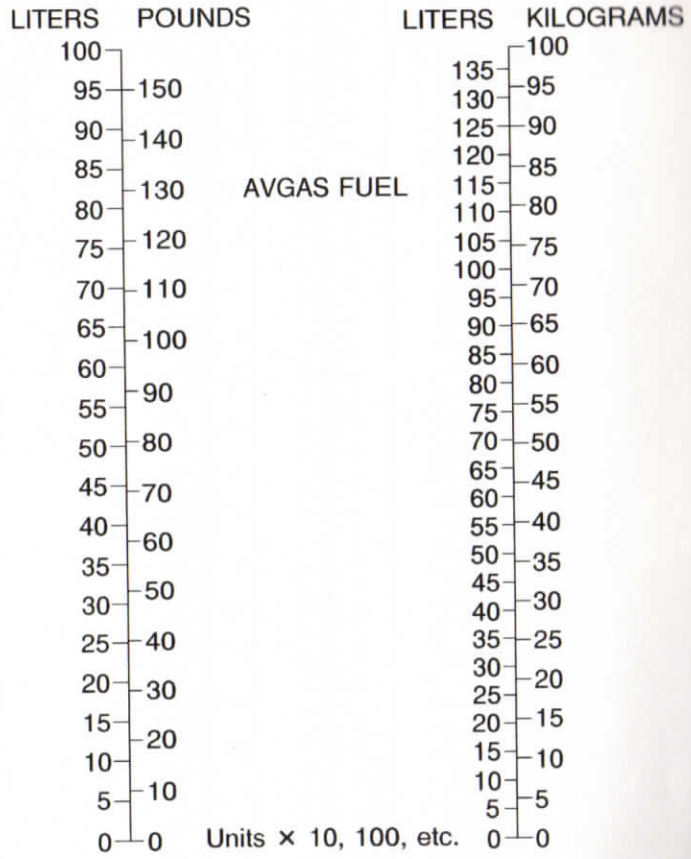

Figure 1-9. Volume to Weight Conversion

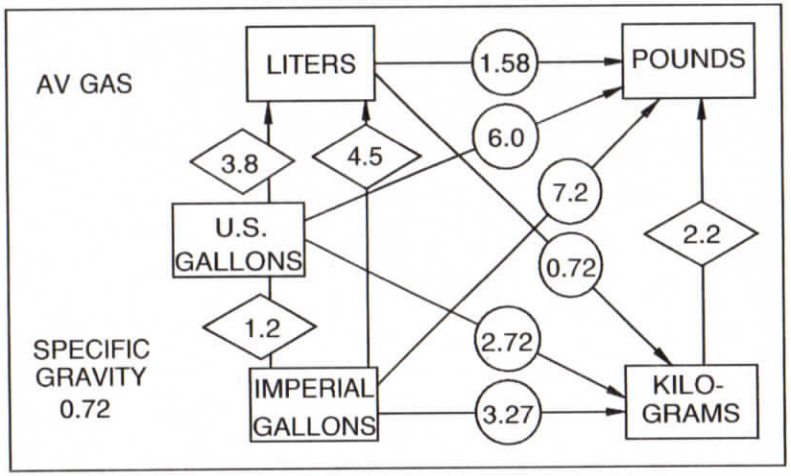

Figure 1-10. Quick Conversions

SECTION 2
LIMITATIONS

TABLE OF CONTENTS

	Page
Introduction	2-3
Airspeed Limitations	2-4
Airspeed Indicator Markings	2-5
Powerplant Limitations	2-5
Powerplant Instrument Markings	2-6
Weight Limits	2-7
Normal Category	2-7
Utility Category	2-7
Center Of Gravity Limits	2-7
Normal Category	2-7
Utility Category	2-8
Maneuver Limits	2-8
Normal Category	2-8
Utility Category	2-9
Flight Load Factor Limits	2-10
Normal Category	2-10
Utility Category	2-10
Kinds Of Operation Limits	2-10
Fuel Limitations	2-11
Additional Fuel Limitations	2-11
Other Limitations	2-11
Flap Limitations	2-11
Placards	2-12

AIRSPEED LIMITATIONS

Airspeed limitations and their operational significance are shown in Figure 2-1. Maneuvering speeds shown apply to normal category operations. The utility category maneuvering speed is 98 KIAS at 2200 pounds.

SYMBOL	SPEED	KCAS	KIAS	REMARKS
V_{NE}	Never Exceed Speed	160	163	Do not exceed this speed in any operation.
V_{NO}	Maximum Structural Cruising Speed	126	129	Do not exceed this speed except in smooth air, and then only with caution.
V_A	Maneuvering Speed: 2550 Pounds 2200 Pounds 1900 Pounds	 102 95 88	 105 98 90	Do not make full or abrupt control movements above this speed.
V_{FE}	Maximum Flap Extended Speed: 10° Flaps 10° to 30° Flaps	 107 85	 110 85	Do not exceed this speed with flaps down.
-----	Maximum Window Open Speed	160	163	Do not exceed this speed with windows open.

Figure 2-1. Airspeed Limitations

AIRSPEED INDICATOR MARKINGS

Airspeed indicator markings and their color code significance are shown in Figure 2-2.

MARKING	KIAS VALUE OR RANGE	SIGNIFICANCE
White Arc	40 - 85	Full Flap Operating Range. Lower limit is maximum weight V_{S_0} in landing configuration. Upper limit is maximum speed permissible with flaps extended.
Green Arc	48 -129	Normal Operating Range. Lower limit is maximum weight V_{S_1} at most forward C.G. with flaps retracted. Upper limit is maximum structural cruising speed.
Yellow Arc	129-163	Operations must be conducted with caution and only in smooth air.
Red Line	163	Maximum speed for all operations.

POWERPLANT LIMITATIONS

Engine Manufacturer: Textron Lycoming.
Engine Model Number: IO-360-L2A.
Maximum Power: 180 BHP rating.
Engine Operating Limits for Takeoff and Continuous Operations:
Maximum Engine Speed: 2700 RPM.

NOTE

The static RPM range at full throttle is 2300 - 2400 RPM.

Maximum Oil Temperature: 245°F (118°C).
Oil Pressure, Minimum: 20 PSI.
Maximum: 115 PSI.

Fuel Grade: See Fuel Limitations.
Oil Grade (Specification):
MIL-L-6082 or SAE J1966 Aviation Grade Straight Mineral Oil or MIL-L-22851 or SAE J1899 Ashless Dispersant Oil. Oil must comply with the latest revision and/or supplement for Textron Lycoming Service Instruction No. 1014.
Propeller Manufacturer: McCauley Propeller Systems.
Propeller Model Number: 1A170E/JHA7660.
Propeller Diameter : Maximum 76 inches.
: Minimum: 75 inch minimum.

POWERPLANT INSTRUMENT MARKINGS

Powerplant instrument markings and their color code significance are shown in Figure 2-3.

INSTRUMENT	RED LINE (MINIMUM)	GREEN ARC (NORMAL OPERATING)	RED LINE (MAX)
Tachometer: **Sea Level** **5000 Feet** **10,000 Feet**	----	2100 to 2500 RPM 2100 to 2600 RPM 2100 to 2700 RPM	2700
Oil Temperature	----	100 to 245°F	245°F
Oil Pressure	20 PSI	50 to 90 PSI	115 PSI
Fuel Quantity	0 (1.5 Gal. Unusable Each Tank)		
Fuel Flow	----	0 to 12 GPH	----
Vacuum Gage	----	4.5 - 5.5 in.Hg	----

Figure 2-3. Powerplant Instrument Markings

WEIGHT LIMITS

NORMAL CATEGORY

Maximum Ramp Weight: 2558 lbs.
Maximum Takeoff Weight: 2550 lbs.
Maximum Landing Weight: 2550 lbs.
Maximum Weight in Baggage Compartment:
Baggage Area 1 - Station 82 to 108: 120 lbs.
Baggage Area 2 - Station 108 to 142: 50 lbs.

NOTE

The maximum combined weight capacity for baggage areas 1 and 2 is 120 lbs.

UTILITY CATEGORY

Maximum Ramp Weight: 2208 lbs.
Maximum Takeoff Weight: 2200 lbs.
Maximum Landing Weight: 2200 lbs.
Maximum Weight in Baggage Compartment: In the utility category, the baggage compartment must be empty and rear seat must not be occupied.

CENTER OF GRAVITY LIMITS

NORMAL CATEGORY

Center of Gravity Range:

Forward: 35.0 inches aft of datum at 1950 lbs. or less, with straight line variation to 41.0 inches aft of datum at 2550 lbs.

Aft: 47.3 inches aft of datum at all weights.

Reference Datum: Lower portion of front face of firewall.

UTILITY CATEGORY

Center of Gravity Range:

Forward: 35.0 inches aft of datum at 1950 lbs. or less, with straight line variation to 37.5 inches aft of datum at 2200 lbs.

Aft: 40.5 inches aft of datum at all weights.

Reference Datum: Lower portion of front face of firewall.

MANEUVER LIMITS

NORMAL CATEGORY

This airplane is certificated in both the normal and utility category. The normal category is applicable to aircraft intended for non aerobatic operations. These include any maneuvers incidental to normal flying, stalls (except whip stalls), lazy eights, chandelles, and turns in which the angle of bank is not more than 60°.

NORMAL CATEGORY MANEUVERS AND RECOMMENDED ENTRY SPEED*

Chandelles	105 Knots
Lazy Eights	105 Knots
Steep Turns	95 Knots
Stalls (Except Whip Stalls)	Slow Deceleration

*** Abrupt use of the controls is prohibited above 105 KIAS.**

UTILITY CATEGORY

This airplane is not designed for purely aerobatic flight. However, in the acquisition of various certificates such as commercial pilot and flight instructor, certain maneuvers are required by the FAA. All of these maneuvers are permitted in this airplane when operated in the utility category.

In the utility category, the rear seat must not be occupied and the baggage compartment must be empty .

UTILITY CATEGORY MANEUVERS AND RECOMMENDED ENTRY SPEED*

Chandelles	105 Knots
Lazy Eights	105 Knots
Steep Turns	95 Knots
Spins	Slow Deceleration
Stalls (Except Whip Stalls)	Slow Deceleration

*** Abrupt use of the controls is prohibited above 98 knots.**

Aerobatics that may impose high loads should not be attempted. The important thing to bear in mind in flight maneuvers is that the airplane is clean in aerodynamic design and will build up speed quickly with the nose down. Proper speed control is an essential requirement for execution of any maneuver, and care should always be exercised to avoid excessive speed which in turn can impose excessive loads. In the execution of all maneuvers, avoid abrupt use of controls.

FLIGHT LOAD FACTOR LIMITS

NORMAL CATEGORY

Flight Load Factors (Maximum Takeoff Weight - 2550 lbs.):

*Flaps Up	+3.8g, -1.52g
*Flaps Down	+3.0g

*The design load factors are 150% of the above, and in all cases, the structure meets or exceeds design loads.

UTILITY CATEGORY

Flight Load Factors (Maximum Takeoff Weight - 2200 lbs.):

*Flaps Up	+4.4g, -1.76g
*Flaps Down	+3.0g

*The design load factors are 150% of the above, and in all cases, the structure meets or exceeds design loads.

KINDS OF OPERATION LIMITS

The airplane as delivered is equipped for day VFR and may be equipped for night VFR and/or IFR operations. FAR Part 91 establishes the minimum required instrumentation and equipment for these operations. The reference to types of flight operations on the operating limitations placard reflects equipment installed at the time of Airworthiness Certificate issuance.

Flight into known icing conditions is prohibited.

FUEL LIMITATIONS

Total Fuel: 56 U.S. gallons (2 tanks at 28.0 gallons each).

Usable Fuel (all flight conditions): 53.0 U.S. gallons.

Unusable Fuel: 3.0 U.S. gallons (1.5 gallons each tank).

NOTE

To ensure maximum fuel capacity and minimize cross-feeding when refueling, always park the airplane in a wings-level, normal ground attitude and place the fuel selector in the Left or Right position. Refer to Figure 1-1 for normal ground attitude definition.

ADDITIONAL FUEL LIMITATIONS

Takeoff and land with the fuel selector valve handle in the BOTH position.

Maximum slip or skid duration with one tank dry: 30 seconds.

Operation on either LEFT or RIGHT tank limited to level flight only.

With 1/4 tank or less, prolonged uncoordinated flight is prohibited when operating on either left or right tank.

Fuel remaining in the tank after the fuel quantity indicator reads 0 (red line) cannot be safely used in flight.

Approved Fuel Grades (and Colors):

100LL Grade Aviation Fuel (Blue).
100 Grade Aviation Fuel (Green).

OTHER LIMITATIONS

FLAP LIMITATIONS

Approved Takeoff Range:	0° to 10°
Approved Landing Range:	0° to 30°

PLACARDS

The following information must be displayed in the form of composite or individual placards.

1. In full view of the pilot: (The "DAY-NIGHT-VFR-IFR" entry, shown on the example below, will vary as the airplane is equipped).

The markings and placards installed in this airplane contain operating limitations which must be complied with when operating this airplane in the Normal Category. Other operating limitations which must be complied with when operating this airplane in this category or in the Utility Category are contained in the Pilot's Operating Handbook and FAA Approved Airplane Flight Manual.

Normal Category	No acrobatic maneuvers, including spins, approved.
Utility Category	No acrobatic maneuvers approved, except those listed in the Pilot's Operating Handbook.
	Baggage compartment and rear seat must not be occupied.
Spin Recovery	Opposite rudder - forward elevator - neutralize controls.

Flight into known icing conditions prohibited.

This airplane is certified for the following flight operations as of date of original airworthiness certificate:

DAY-NIGHT-VFR-IFR

2. On the fuel selector valve:

TAKEOFF LANDING	BOTH 53.0 GAL.	ALL FLIGHT ATTITUDES

FUEL SELECTOR

LEFT 26.5 GAL. LEVEL FLIGHT ONLY	RIGHT 26.5 GAL. LEVEL FLIGHT ONLY

3. Near fuel tank filler cap:

FUEL
100LL/100 MIN. GRADE AVIATION GASOLINE
CAP. 26.5 U.S. GAL. USABLE
CAP 17.5 U.S. GAL USABLE TO BOTTOM
OF FILLER INDICATOR TAB

4. On flap control indicator:

0° to 10°	110 KIAS	(Partial flap range with blue color code; also, mechanical detent at 10°.)
10° to 30°	85 KIAS	(White color code; also, mechanical detent at 20°.)

5. In baggage compartment:

120 POUNDS MAXIMUM BAGGAGE
FORWARD OF BAGGAGE DOOR LATCH

50 POUNDS MAXIMUM
BAGGAGE AFT OF BAGGAGE DOOR LATCH

MAXIMUM 120 POUNDS COMBINED

FOR ADDITIONAL LOADING INSTRUCTIONS
SEE WEIGHT AND BALANCE DATA

6. A calibration card must be provided to indicate the accuracy of the magnetic compass in 30° increments.

7. On the oil filler cap:

OIL
8 QTS

8. On control lock:

CAUTION!
CONTROL LOCK
REMOVE BEFORE STARTING ENGINE

9. Near airspeed indicator:

MANEUVERING SPEED - 105 KIAS

10. On the Upper Right Side of the Aft Cabin Partition:

EMERGENCY LOCATOR TRANSMITTER
INSTALLED AFT OF THIS PARTITION
MUST BE SERVICED IN ACCORDANCE
WITH FAR PART 91.207

11. On forward face of firewall adjacent to the battery:

CAUTION 24 VOLTS D.C.
THIS AIRCRAFT IS EQUIPPED WITH ALTERNATOR
AND A NEGATIVE GROUND SYSTEM.
OBSERVE PROPER POLARITY.
REVERSE POLARITY WILL DAMAGE ELECTRICAL
COMPONENTS.

12. On the upper right instrument panel:

SMOKING PROHIBITED

SECTION 3
EMERGENCY PROCEDURES

TABLE OF CONTENTS

Page

Introduction 3-3

AIRSPEEDS

Airspeeds For Emergency Operation 3-3

EMERGENCY PROCEDURES CHECKLIST

Engine Failures 3-4
- Engine Failure During Takeoff Roll 3-4
- Engine Failure Immediately After Takeoff 3-4
- Engine Failure During Flight (Restart Procedures) 3-5

Forced Landings 3-5
- Emergency Landing Without Engine Power 3-5
- Precautionary Landing With Engine Power 3-6
- Ditching 3-7

Fires 3-7
- During Start On Ground 3-7
- Engine Fire In Flight 3-8
- Electrical Fire In Flight 3-8
- Cabin Fire 3-9
- Wing Fire 3-9

Icing 3-9
- Inadvertent Icing Encounter 3-9
- Static Source Blockage 3-10

Landing With A Flat Main Tire 3-10

Landing With A Flat Nose Tire 3-10

TABLE OF CONTENTS (Continued)

	Page
Electrical Power Supply System Malfunctions	3-11
Ammeter Shows Excessive Rate of Charge (Full Scale Deflection)	3-11
Low Voltage Annunciator (VOLTS) Illuminates During Flight (Ammeter Indicates Discharge)	3-11
Vacuum System Failure	3-12

AMPLIFIED EMERGENCY PROCEDURES

Engine Failure	3-13
Forced Landings	3-15
Landing Without Elevator Control	3-15
Fires	3-16
Emergency Operation In Clouds (Vacuum System Failure)	3-16
Executing A 180° Turn In Clouds	3-16
Emergency Descent Through Clouds	3-17
Recovery From Spiral Dive In The Clouds	3-18
Inadvertent Flight Into Icing Conditions	3-18
Static Source Blocked	3-18
Spins	3-19
Rough Engine Operation Or Loss Of Power	3-20
Spark Plug Fouling	3-20
Magneto Malfunction	3-20
Engine-Driven Fuel Pump Failure	3-20
Excessive Fuel Vapor Indications	3-21
Low Oil Pressure	3-21
Electrical Power Supply System Malfunctions	3-22
Excessive Rate of Charge	3-22
Insufficient Rate Of Charge	3-23
Other Emergencies	3-23
Windshield Damage	3-23

INTRODUCTION

Section 3 provides checklist and amplified procedures for coping with emergencies that may occur. Emergencies caused by airplane or engine malfunctions are extremely rare if proper preflight inspections and maintenance are practiced. Enroute weather emergencies can be minimized or eliminated by careful flight planning and good judgment when unexpected weather is encountered. However, should an emergency arise, the basic guidelines described in this section should be considered and applied as necessary to correct the problem. Emergency procedures associated with standard avionics, the ELT, or any optional systems can be found in the Supplements, Section 9.

AIRSPEEDS

AIRSPEEDS FOR EMERGENCY OPERATION

Engine Failure After Takeoff:	
Wing Flaps Up	70 KIAS
Wing Flaps Down	65 KIAS
Maneuvering Speed:	
2550 Lbs	105 KIAS
2200 Lbs	98 KIAS
1900 Lbs	90 KIAS
Maximum Glide	68 KIAS
Precautionary Landing With Engine Power	65 KIAS
Landing Without Engine Power:	
Wing Flaps Up	70 KIAS
Wing Flaps Down	65 KIAS

EMERGENCY PROCEDURES CHECKLIST

Procedures in the Emergency Procedures Checklist portion of this section shown in **bold faced** type are immediate action items which should be committed to memory.

ENGINE FAILURES

ENGINE FAILURE DURING TAKEOFF ROLL

1. **Throttle -- IDLE.**
2. **Brakes-- APPLY.**
3. Wing Flaps -- RETRACT.
4. Mixture -- IDLE CUT OFF.
5. Ignition Switch -- OFF.
6. Master Switch -- OFF.

ENGINE FAILURE IMMEDIATELY AFTER TAKEOFF

1. **Airspeed -- 70 KIAS (flaps UP).**
   65 KIAS (flaps DOWN).
2. Mixture -- IDLE CUT OFF.
3. Fuel Shutoff Valve -- OFF (Pull Full Out).
4. Ignition Switch -- OFF.
5. Wing Flaps -- AS REQUIRED.
6. Master Switch -- OFF.
7. Cabin Door -- UNLATCH.
8. Land -- STRAIGHT AHEAD.

ENGINE FAILURE DURING FLIGHT (Restart Procedures)

1. **Airspeed -- 68 KIAS.**
2. **Fuel Shutoff Valve -- ON (push full in).**
3. **Fuel Selector Valve -- BOTH.**
4. **Auxiliary Fuel Pump Switch -- ON.**
5. **Mixture -- RICH (if restart has not occurred).**
6. Ignition Switch -- BOTH (or START if propeller is stopped).

NOTE

If the propeller is windmilling, the engine will restart automatically within a few seconds. If the propeller has stopped (possible at low speeds), turn the ignition switch to START, advance the throttle slowly from idle and lean the mixture from full rich as required for smooth operation.

7. Auxiliary Fuel Pump Switch -- OFF.

NOTE

If the fuel flow indicator immediately drops to zero (indicating an engine-driven fuel pump failure), return the Auxiliary Fuel Pump Switch to the ON position.

FORCED LANDINGS

EMERGENCY LANDING WITHOUT ENGINE POWER

1. Passenger Seat Backs -- MOST UPRIGHT POSITION.
2. Seats and Seat Belts -- SECURE.
3. Airspeed -- 70 KIAS (flaps UP).
   65 KIAS (flaps DOWN).
4. Mixture -- IDLE CUT OFF.
5. Fuel Shutoff Valve -- OFF (Pull Full Out).
6. Ignition Switch -- OFF.
7. Wing Flaps -- AS REQUIRED (30° recommended).
8. Master Switch -- OFF (when landing is assured).
9. Doors -- UNLATCH PRIOR TO TOUCHDOWN.
10. Touchdown -- SLIGHTLY TAIL LOW.
11. Brakes -- APPLY HEAVILY.

PRECAUTIONARY LANDING WITH ENGINE POWER

1. Passenger Seat Backs -- MOST UPRIGHT POSITION.
2. Seats and Seat Belts -- SECURE.
3. Airspeed -- 65 KIAS.
4. Wing Flaps -- 20°.
5. Selected Field -- FLY OVER, noting terrain and obstructions, then retract flaps upon reaching a safe altitude and airspeed.
6. Avionics Master Switch and Electrical Switches -- OFF.
7. Wing Flaps -- 30° (on final approach).
8. Airspeed -- 65 KIAS.
9. Master Switch -- OFF.
10. Doors -- UNLATCH PRIOR TO TOUCHDOWN.
11. Touchdown -- SLIGHTLY TAIL LOW.
12. Ignition Switch -- OFF.
13. Brakes -- APPLY HEAVILY.

DITCHING

1. Radio -- TRANSMIT MAYDAY on 121.5 MHz, giving location and intentions and SQUAWK 7700.
2. Heavy Objects (in baggage area) -- SECURE OR JETTISON (if possible).
3. Passenger Seat Backs -- MOST UPRIGHT POSITION.
4. Seats and Seat Belts -- SECURE.
5. Wing Flaps -- 20° to 30°.
6. Power -- ESTABLISH 300 FT/MIN DESCENT AT 55 KIAS.

NOTE

If no power is available, approach at 70 KIAS with flaps up or at 65 KIAS with 10° flaps.

7. Approach -- High Winds, Heavy Seas -- INTO THE WIND.
   Light Winds, Heavy Swells -- PARALLEL TO SWELLS.
8. Cabin Doors -- UNLATCH.
9. Touchdown -- LEVEL ATTITUDE AT ESTABLISHED RATE OF DESCENT.
10. Face -- CUSHION at touchdown with folded coat.
11. ELT -- Activate.
12. Airplane -- EVACUATE through cabin doors. If necessary, open window and flood cabin to equalize pressure so doors can be opened.
13. Life Vests and Raft -- INFLATE WHEN CLEAR OF AIRPLANE.

FIRES

DURING START ON GROUND

1. **Ignition Switch -- START, Continue Cranking** to get a start which would suck the flames and accumulated fuel into the engine.

If engine starts:

2. Power -- 1800 RPM for a few minutes.
3. Engine -- SHUTDOWN and inspect for damage.

If engine fails to start:

4. **Throttle -- FULL OPEN.**
5. **Mixture -- IDLE CUT OFF.**
6. **Cranking -- CONTINUE.**
7. **Fuel Shutoff Valve -- OFF (Pull Full Out).**
8. **Auxiliary Fuel Pump Switch -- OFF.**
9. Fire Extinguisher -- ACTIVATE.
10. Engine -- SECURE.
    a. Master Switch -- OFF.
    b. Ignition Switch -- OFF
11. Parking Brake -- RELEASE.
12. Airplane -- EVACUATE.
13. Fire -- EXTINGUISH using fire extinguisher, wool blanket, or dirt.
14. Fire Damage -- INSPECT, repair damage or replace damaged components or wiring before conducting another flight.

ENGINE FIRE IN FLIGHT

1. **Mixture -- IDLE CUT OFF.**
2. **Fuel Shutoff Valve -- Pull Out (OFF).**
3. **Auxiliary Fuel Pump Switch -- OFF.**
4. **Master Switch -- OFF.**
5. Cabin Heat and Air -- OFF (except overhead vents).
6. Airspeed -- 100 KIAS (If fire is not extinguished, increase glide speed to find an airspeed - within airspeed limitations - which will provide an incombustible mixture).
7. Forced Landing -- EXECUTE (as described in Emergency Landing Without Engine Power).

ELECTRICAL FIRE IN FLIGHT

1. **Master Switch -- OFF.**
2. **Vents, Cabin Air, Heat -- CLOSED.**
3. **Fire Extinguisher -- ACTIVATE.**
4. Avionics Master Switch -- OFF.
5. All Other Switches (except ignition switch) -- OFF.

⚠ WARNING

AFTER DISCHARGING FIRE EXTINGUISHER AND ASCERTAINING THAT FIRE HAS BEEN EXTINGUISHED, VENTILATE THE CABIN.

6. Vents/Cabin Air/Heat -- OPEN when it is ascertained that fire is completely extinguished.

If fire has been extinguished and electrical power is necessary for continuance of flight to nearest suitable airport or landing area:

7. Master Switch -- ON.
8. Circuit Breakers -- CHECK for faulty circuit, do not reset.
9. Radio Switches -- OFF.
10. Avionics Master Switch -- ON.
11. Radio/Electrical Switches -- ON one at a time, with delay after each until short circuit is localized.

CABIN FIRE

1. **Master Switch -- OFF.**
2. **Vents/Cabin Air/Heat -- CLOSED** (to avoid drafts).
3. **Fire Extinguisher -- ACTIVATE.**

⚠ WARNING

AFTER DISCHARGING FIRE EXTINGUISHER AND ASCERTAINING THAT FIRE HAS BEEN EXTINGUISHED, VENTILATE THE CABIN.

4. Vents/Cabin Air/Heat -- Open when it is ascertained that fire is completely extinguished.
5. Land the airplane as soon as possible to inspect for damage.

WING FIRE

1. **Landing/Taxi Light Switches -- OFF.**
2. **Navigation Light Switch -- OFF.**
3. **Strobe Light Switch -- OFF.**
4. **Pitot Heat Switch -- OFF.**

NOTE

Perform a sideslip to keep the flames away from the fuel tank and cabin. Land as soon as possible using flaps only as required for final approach and touchdown.

ICING

INADVERTENT ICING ENCOUNTER

1. **Turn pitot heat switch ON.**
2. **Turn back or change altitude** to obtain an outside air temperature that is less conducive to icing.
3. **Pull cabin heat control full out and open defroster outlets** to obtain maximum windshield defroster airflow. Adjust cabin air control to get maximum defroster heat and airflow.
4. Watch for signs of engine-related icing conditions. An unexplained loss in engine speed could be caused by ice blocking the air intake filter, or, in extremely rare instances, ice completely blocking the fuel injection air reference tubes. Change the throttle position to obtain maximum RPM. This may require either advancing or retarding the throttle, dependent on where ice has accumulated in the system. Adjust mixture, as required, for maximum RPM.
5. Plan a landing at the nearest airport. With an extremely rapid ice build up, select a suitable "off airport" landing site.
6. With an ice accumulation of 1/4 inch or more on the wing leading edges, be prepared for significantly higher stall speed and a longer landing roll.
7. Leave wing flaps retracted. With a severe ice build up on the horizontal tail, the change in wing wake airflow direction caused by wing flap extension could result in a loss of elevator effectiveness.
8. Open left window and, if practical, scrape ice from a portion of the windshield for visibility in the landing approach.
9. Perform a landing approach using a forward slip, if necessary, for improved visibility.

10. Approach at 65 to 75 KIAS depending upon the amount of the accumulation.
11. Perform a landing in level attitude.

STATIC SOURCE BLOCKAGE
(Erroneous Instrument Reading Suspected)

1. **Static Pressure Alternate Source Valve -- PULL ON.**
2. Airspeed -- Consult appropriate calibration tables in Section 5.

LANDING WITH A FLAT MAIN TIRE

1. Approach -- NORMAL.
2. Wing Flaps -- 30°.
3. Touchdown -- GOOD MAIN TIRE FIRST, hold airplane off flat tire as long as possible with aileron control.
4. Directional Control -- MAINTAIN using brake on good wheel as required.

LANDING WITH A FLAT NOSE TIRE

1. Approach -- NORMAL.
2. Flaps -- AS REQUIRED.
3. Touchdown -- ON MAINS, hold nose wheel off the ground as long as possible.
4. When nose wheel touches down, maintain full up elevator as airplane slows to stop.

ELECTRICAL POWER SUPPLY SYSTEM MALFUNCTIONS

AMMETER SHOWS EXCESSIVE RATE OF CHARGE
(Full Scale Deflection)

1. Alternator -- OFF.

⚠ CAUTION

WITH THE ALTERNATOR SIDE OF THE MASTER SWITCH OFF, COMPASS DEVIATIONS OF AS MUCH AS 25° MAY OCCUR.

2. Nonessential Electrical Equipment -- OFF.
3. Flight -- TERMINATE as soon as practical.

LOW VOLTAGE ANNUNCIATOR (VOLTS) ILLUMINATES DURING FLIGHT (Ammeter Indicates Discharge)

NOTE

Illumination of "VOLTS" on the annunciator panel may occur during low RPM conditions with an electrical load on the system such as during a low RPM taxi. Under these conditions, the annunciator will go out at higher RPM. The master switch need not be recycled since an overvoltage condition has not occurred to deactivate the alternator system.

1. Avionics Master Switch -- OFF.
2. Alternator Circuit Breaker (ALT FLD) -- CHECK IN.
3. Master Switch -- OFF (both sides).
4. Master Switch -- ON.
5. Low Voltage Annunciator (VOLTS) -- CHECK OFF.
6. Avionics Master Switch -- ON.

If low voltage annunciator (VOLTS) illuminates again:

7. Alternator -- OFF.
8. Nonessential Radio and Electrical Equipment -- OFF.
9. Flight -- TERMINATE as soon as practical.

VACUUM SYSTEM FAILURE

Left Vacuum (L VAC) Annunciator or Right Vacuum (VAC R) Annunciator Illuminates.

⚠ CAUTION

IF VACUUM IS NOT WITHIN NORMAL OPERATING LIMITS, A FAILURE HAS OCCURRED IN THE VACUUM SYSTEM AND PARTIAL PANEL PROCEDURES MAY BE REQUIRED FOR CONTINUED FLIGHT.

1. **Vacuum Gage -- CHECK** to ensure vacuum within normal operating limits.

AMPLIFIED EMERGENCY PROCEDURES

The following Amplified Emergency Procedures elaborate upon information contained in the Emergency Procedures Checklists portion of this section. These procedures also include information not readily adaptable to a checklist format, and material to which a pilot could not be expected to refer in resolution of a specific emergency. This information should be reviewed in detail prior to flying the airplane, as well as reviewed on a regular basis to keep pilot's knowledge of procedures fresh.

ENGINE FAILURE

If an engine failure occurs during the takeoff roll, the most important thing to do is stop the airplane on the remaining runway. Those extra items on the checklist will provide added safety after a failure of this type.

Prompt lowering of the nose to maintain airspeed and establish a glide attitude is the first response to an engine failure after takeoff. In most cases, the landing should be planned straight ahead with only small changes in direction to avoid obstructions. Altitude and airspeed are seldom sufficient to execute a 180° gliding turn necessary to return to the runway. The checklist procedures assume that adequate time exists to secure the fuel and ignition systems prior to touchdown.

After an engine failure in flight, the most important course of action is to continue flying the airplane. Best glide speed as shown in Figure 3-1 should be established as quickly as possible. While gliding toward a suitable landing area, an effort should be made to identify the cause of the failure. If time permits, an engine restart should be attempted as shown in the checklist. If the engine cannot be restarted, a forced landing without power must be completed.

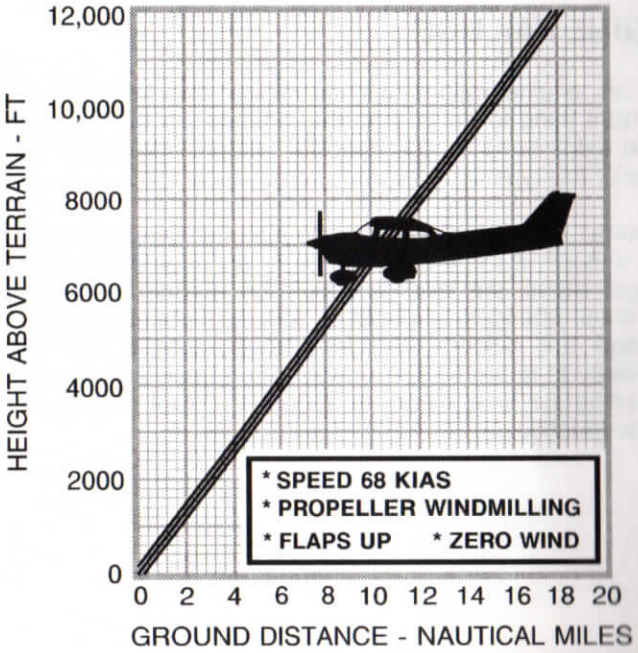

0585C1011

Figure 3-1. Maximum Glide

FORCED LANDINGS

If all attempts to restart the engine fail and a forced landing is imminent, select a suitable field and prepare for the landing as discussed under the Emergency Landing Without Engine Power checklist. Transmit Mayday message on 121.5 MHz giving location and intentions and squawk 7700.

Before attempting an "off airport" landing with engine power available, one should fly over the landing area at a safe but low altitude to inspect the terrain for obstructions and surface conditions, proceeding as discussed under the Precautionary Landing With Engine Power checklist.

Prepare for ditching by securing or jettisoning heavy objects located in the baggage area and collect folded coats for protection of occupants' face at touchdown. Transmit Mayday message on 121.5 MHz giving location and intentions and squawk 7700. Avoid a landing flare because of difficulty in judging height over a water surface. The checklist assumes the availability of power to make a precautionary water landing. If power is not available, use of the airspeeds noted with minimum flap extension will provide a more favorable attitude for a power off ditching.

In a forced landing situation, do not set the AVIONICS MASTER switch or the airplane MASTER switch to the OFF position until a landing is assured. When these switches are in the OFF position, the airplane electrical systems are de-energized.

Before performing a forced landing, especially in remote and mountainous areas, activate the ELT transmitter by positioning the cockpit-mounted switch to the ON position. For complete information on ELT operation, refer to the Supplements, Section 9.

LANDING WITHOUT ELEVATOR CONTROL

Trim for horizontal flight (with an airspeed of approximately 65 KIAS and flaps set to 20°) by using throttle and elevator trim controls. Then **do not change the elevator trim control setting**; control the glide angle by adjusting power exclusively.

At the landing flare (round-out), the nose down moment resulting from power reduction is an adverse factor and the airplane may land on the nose wheel. Consequently, at flare, the elevator trim control should be adjusted toward the full nose up position and the power adjusted so that the airplane will rotate to the horizontal attitude for touchdown. Close the throttle at touchdown.

FIRES

Although engine fires are extremely rare in flight, the steps of the appropriate checklist should be followed if one is encountered. After completion of this procedure, execute a forced landing. Do not attempt to restart the engine.

The initial indication of an electrical fire is usually the odor of burning insulation. The checklist for this problem should result in elimination of the fire.

EMERGENCY OPERATION IN CLOUDS (Total Vacuum System Failure)

If both the vacuum pumps fail in flight, the directional indicator and attitude indicator will be disabled, and the pilot will have to rely on the turn coordinator if he inadvertently flies into clouds. If an autopilot is installed, it too may be affected. Refer to Section 9, Supplements, for additional details concerning autopilot operation. The following instructions assume that only the electrically powered turn coordinator is operative, and that the pilot is not completely proficient in instrument flying.

EXECUTING A 180° TURN IN CLOUDS

Upon inadvertently entering the clouds, an immediate plan should be made to turn back as follows:

1. Note the compass heading.
2. Using the clock, initiate a standard rate left turn, holding the turn coordinator symbolic airplane wing opposite the lower left index mark for 60 seconds. Then roll back to level flight by leveling the miniature airplane.

3. Check accuracy of the turn by observing the compass heading which should be the reciprocal of the original heading.
4. If necessary, adjust heading primarily with skidding motions rather than rolling motions so that the compass will read more accurately.
5. Maintain altitude and airspeed by cautious application of elevator control. Avoid over controlling by keeping the hands off the control wheel as much as possible and steering only with rudder.

EMERGENCY DESCENT THROUGH CLOUDS

If conditions prevent return to VFR flight by a 180° turn, a descent through a cloud deck to VFR conditions may be appropriate. If possible, obtain radio clearance for an emergency descent through clouds. To guard against a spiral dive, choose an easterly or westerly heading to minimize compass card swings due to changing bank angles. In addition, keep hands off the control wheel and steer a straight course with rudder control by monitoring the turn coordinator. Occasionally check the compass heading and make minor corrections to hold an approximate course. Before descending into the clouds, set up a stabilized letdown condition as follows:

1. Apply full rich mixture.
2. Reduce power to set up a 500 to 800 ft/min rate of descent.
3. Adjust the elevator trim for a stabilized descent at 70-80 KIAS.
4. Keep hands off the control wheel.
5. Monitor turn coordinator and make corrections by rudder alone.
6. Check trend of compass card movement and make cautious corrections with rudder to stop the turn.
7. Upon breaking out of clouds, resume normal cruising flight.

RECOVERY FROM SPIRAL DIVE IN THE CLOUDS

If a spiral is encountered in the clouds, proceed as follows:

1. Retard throttle to idle position.
2. Stop the turn by using coordinated aileron and rudder control to align the symbolic airplane in the turn coordinator with the horizon reference line.
3. Cautiously apply elevator back pressure to slowly reduce the airspeed to 80 KIAS.
4. Adjust the elevator trim control to maintain an 80 KIAS glide.
5. Keep hands off the control wheel, using rudder control to hold a straight heading.
6. Clear engine occasionally, but avoid using enough power to disturb the trimmed glide.
7. Upon breaking out of clouds, resume normal cruising flight.

INADVERTENT FLIGHT INTO ICING CONDITIONS

Flight into icing conditions is **prohibited** and extremely dangerous. An inadvertent encounter with these conditions can best be handled using the checklist procedures. The best procedure, of course, is to turn back or change altitude to escape icing conditions.

During these encounters, an unexplained loss in engine speed could be caused by ice blocking the air intake filter, or, in extremely rare instances, ice completely blocking the fuel injection air reference tubes. In either case, the throttle should be positioned to obtain maximum RPM (in some instances, the throttle may need to be retarded for maximum power). The mixture should then be adjusted, as required, to obtain maximum RPM.

STATIC SOURCE BLOCKED

If erroneous readings of the static source instruments (airspeed, altimeter and vertical speed) are suspected, the static pressure alternate source valve should be pulled ON, thereby supplying static pressure to these instruments from the cabin.

When using the alternate static source, refer to the Alternate Static Source Airspeed Calibration table in Section 5, Performance, for additional information.

Maximum airspeed and altimeter variation from normal is 4 knots and 30 feet over the normal operating range with the window(s) closed. See Section 5, Performance, for additional airspeed calibration data.

SPINS

Should an inadvertent spin occur, the following recovery procedure should be used:

1. RETARD THROTTLE TO IDLE POSITION.
2. PLACE AILERONS IN NEUTRAL POSITION.
3. APPLY AND **HOLD** FULL RUDDER OPPOSITE TO THE DIRECTION OF ROTATION.
4. JUST **AFTER** THE RUDDER REACHES THE STOP, MOVE THE CONTROL WHEEL **BRISKLY** FORWARD FAR ENOUGH TO BREAK THE STALL. Full down elevator may be required at aft center of gravity loadings to assure optimum recoveries.
5. **HOLD** THESE CONTROL INPUTS UNTIL ROTATION STOPS. Premature relaxation of the control inputs may extend the recovery.
6. AS ROTATION STOPS, NEUTRALIZE RUDDER, AND MAKE A SMOOTH RECOVERY FROM THE RESULTING DIVE.

NOTE

If disorientation precludes a visual determination of the direction of rotation, the symbolic airplane in the turn coordinator may be referred to for this information.

For additional information on spins and spin recovery, see the discussion under SPINS in Normal Procedures (Section 4).

ROUGH ENGINE OPERATION OR LOSS OF POWER

SPARK PLUG FOULING

A slight engine roughness in flight may be caused by one or more spark plugs becoming fouled by carbon or lead deposits. This may be verified by turning the ignition switch momentarily from BOTH to either L or R position. An obvious power loss in single ignition operation is evidence of spark plug or magneto trouble. Assuming that spark plugs are the more likely cause, lean the mixture to the recommended lean setting for cruising flight. If the problem does not clear up in several minutes, determine if a richer mixture setting will produce smoother operation. If not, proceed to the nearest airport for repairs using the BOTH position of the ignition switch unless extreme roughness dictates the use of a single ignition position.

MAGNETO MALFUNCTION

A sudden engine roughness or misfiring is usually evidence of magneto problems. Switching from BOTH to either L or R ignition switch position will identify which magneto is malfunctioning. Select different power settings and enrichen the mixture to determine if continued operation on BOTH magnetos is possible. If not, switch to the good magneto and proceed to the nearest airport for repairs.

ENGINE-DRIVEN FUEL PUMP FAILURE

Failure of the engine-driven fuel pump will result in an immediate loss of engine power, similar to fuel exhaustion or starvation, but while operating from a fuel tank containing adequate fuel. A sudden reduction in indicated fuel flow will occur just before loss of engine power.

If the engine-driven fuel pump fails, immediately set the auxiliary fuel pump switch (FUEL PUMP) to the ON position to restore engine power. The flight should be terminated as soon as practical and the engine-driven fuel pump repaired.

EXCESSIVE FUEL VAPOR INDICATIONS

Excessive fuel vapor is most likely to be generated during ground operations when operating at higher altitudes, in unusually warm temperatures or with more volatile fuel blends. Operation at or near idle RPM (low fuel flow) for extended periods will increase the chances of fuel vapor generation. (See "Leaning For Ground Operations", Section 4.)

Indicated fuel flow that is not stable (sudden changes greater than 1 gal/hr) is a sign that fuel vapor may be present in the system. Fuel flow indications that become less stable (increasing changes) may lead to power surges and power loss if not corrected.

If in-flight vapor is suspected, smoother engine operation may result from making the following changes (singly or together): set the auxiliary fuel pump to the ON position, lean the mixture for smooth engine operation and select another fuel tank. Increasing the airspeed to provide more air flow through the cowling will aid in cooling the engine and fuel system components.

LOW OIL PRESSURE

If the low oil pressure annunciator (OIL PRESS) illuminates and oil temperature remains normal, the oil pressure sending unit or relief valve may be malfunctioning. Land at the nearest airport to inspect the source of trouble.

If a total loss of oil pressure is accompanied by a rise in oil temperature, there is good reason to suspect an engine failure is imminent. Reduce engine power immediately and select a suitable forced landing field. Use only the minimum power required to reach the desired touchdown spot.

An excessively rich idle fuel flow may cause low speed engine roughness during flight. During most in-flight low engine speeds (power off stalls, approach to landing, etc), the mixture control is normally in the full-rich position. However, to improve engine roughness (caused by an improperly adjusted fuel servo) during low engine speeds while in flight, you should rotate the vernier mixture control (leaning of fuel mix.). You may also have to lean the fuel mix. If this low engine speed results in power loss and you need to restart the engine during flight. In all cases, you should land the a/c at the nearest airport for repairs if low speed engine roughness requires you to adjust the fuel mix. Control to improve engine operation."

ELECTRICAL POWER SUPPLY SYSTEM MALFUNCTIONS

Malfunctions in the electrical power supply system can be detected by periodic monitoring of the ammeter and low voltage annunciator (VOLTS); however, the cause of these malfunctions is usually difficult to determine. A broken alternator drive belt or wiring is most likely the cause of alternator failures, although other factors could cause the problem. A defective alternator control unit can also cause malfunctions. Problems of this nature constitute an electrical emergency and should be dealt with immediately. Electrical power malfunctions usually fall into two categories: excessive rate of charge and insufficient rate of charge. The following paragraphs describe the recommended remedy for each situation.

EXCESSIVE RATE OF CHARGE

After engine starting and heavy electrical usage at low engine speeds (such as extended taxiing) the battery condition will be low enough to accept above normal charging during the initial part of a flight. However, after thirty minutes of cruising flight, the ammeter should be indicating less than two needle widths of charging current. If the charging rate were to remain above this value on a long flight, the battery would overheat and evaporate the electrolyte at an excessive rate.

Electronic components in the electrical system can be adversely affected by higher than normal voltage. The alternator control unit includes an overvoltage sensor which normally will automatically shut down the alternator if the charge voltage reaches approximately 31.5 volts. If the overvoltage sensor malfunctions, as evidenced by an excessive rate of charge shown on the ammeter, the alternator should be turned off, nonessential electrical equipment turned off and the flight terminated as soon as practical.

INSUFFICIENT RATE OF CHARGE

NOTE

The low voltage annunciator (VOLTS) may come on and ammeter discharge indications may occur during low RPM conditions with an electrical load on the system, such as during a low RPM taxi. Under these conditions, the annunciator will go out at higher RPM.

If the overvoltage sensor should shut down the alternator and trip the alternator circuit breaker (ALT FLD), or if the alternator output is low, a discharge rate will be shown on the ammeter followed by illumination of the low voltage annunciator (VOLTS). Since this may be a "nuisance" trip out, an attempt should be made to reactivate the alternator system. To reactivate, set the avionics master switch to the OFF position, check that the alternator circuit breaker (ALT FLD) is in, then set both sides of the master switch to the OFF position and then to the ON position. If the problem no longer exists, normal alternator charging will resume and the low voltage annunciator (VOLTS) will go off. The avionics master switch may then be returned to the ON position.

If the annunciator illuminates again, a malfunction is confirmed. In this event, the flight should be terminated and/or the current drain on the battery minimized because the battery can supply the electrical system for only a limited period of time. Battery power must be conserved for later operation of the wing flaps and, if the emergency occurs at night, for possible use of the landing lights during landing.

OTHER EMERGENCIES

WINDSHIELD DAMAGE

If a bird strike or other incident should damage the windshield in flight to the point of creating an opening, a significant loss in performance may be expected. This loss may be minimized in some cases (depending on amount of damage, altitude, etc.) by opening the side windows while the airplane is maneuvered for a landing at the nearest airport. If airplane performance or other adverse conditions preclude landing at an airport, prepare for an "off airport" landing in accordance with the Precautionary Landing With Engine Power or Ditching checklists.

SECTION 4
NORMAL PROCEDURES

TABLE OF CONTENTS

Page

Introduction 4-5

AIRSPEEDS

Airspeeds For Normal Operation 4-5

CHECKLIST PROCEDURES

Preflight Inspection 4-7
- Cabin 4-7
- Empennage 4-8
- Right Wing, Trailing Edge 4-8
- Right Wing 4-8
- Nose 4-9
- Left Wing 4-10
- Left Wing, Leading Edge 4-11
- Left Wing, Trailing Edge 4-11

Before Starting Engine 4-11
Starting Engine (With Battery) 4-12
Starting Engine (With External Power) 4-13
Before Takeoff 4-15
Takeoff 4-15
- Normal Takeoff 4-15
- Short Field Takeoff 4-16

Enroute Climb 4-16
Cruise 4-16
Descent 4-16
Before Landing 4-16

TABLE OF CONTENTS (Continued)

	Page
Landing	4-17
Normal Landing	4-17
Short Field Landing	4-17
Balked Landing	4-17
After Landing	4-17
Securing Airplane	4-17
AMPLIFIED PROCEDURES	
Preflight Inspection	4-18
Starting Engine	4-19
Recommended Starter Duty Cycle	4-20
Leaning For Ground Operations	4-21
Taxiing	4-21
Before Takeoff	4-23
Warm Up	4-23
Magneto Check	4-23
Alternator Check	4-23
Landing Lights	4-24
Takeoff	4-24
Power Check	4-24
Wing Flap Settings	4-25
Crosswind Takeoff	4-25
Enroute Climb	4-25
Cruise	4-26
Leaning With an EGT Indicator	4-27
Fuel Savings Procedures for Flight Training Operations	4-28
Fuel Vapor Procedures	4-29
Stalls	4-30
Spins	4-30
Closed Throttle Engine Operating (Idling) During Flight	4-32

TABLE OF CONTENTS (Continued)

	Page
Landing	4-33
Normal Landing	4-33
Short Field Landing	4-33
Crosswind Landing	4-34
Balked Landing	4-34
Cold Weather Operation	4-34
Winterization Kit	4-36
Hot Weather Operation	4-36
Noise Characteristics And Noise Reduction	4-36

INTRODUCTION

Section 4 provides checklist and amplified procedures for the conduct of normal operation. Normal procedures associated with optional systems can be found in the Supplements, Section 9.

AIRSPEEDS

AIRSPEEDS FOR NORMAL OPERATION

Unless otherwise noted, the following speeds are based on a maximum weight of 2550 pounds and may be used for any lesser weight.

Takeoff:	
Normal Climb Out	75-85 KIAS
Short Field Takeoff, Flaps 10°, Speed at 50 Feet	56 KIAS
Enroute Climb, Flaps Up:	
Normal, Sea Level	75-85 KIAS
Normal, 10,000 Feet	70-80 KIAS
Best Rate-of-Climb, Sea Level	74 KIAS
Best Rate-of-Climb, 10,000 Feet	72 KIAS
Best Angle-of-Climb, Sea Level	62 KIAS
Best Angle-of-Climb, 10,000 Feet	67 KIAS
Landing Approach:	
Normal Approach, Flaps Up	65-75 KIAS
Normal Approach, Flaps 30°	60-70 KIAS
Short Field Approach, Flaps 30°	61 KIAS
Balked Landing:	
Maximum Power, Flaps 20°	60 KIAS
Maximum Recommended Turbulent Air Penetration Speed:	
2550 Lbs	105 KIAS
2200 Lbs	98 KIAS
1900 Lbs	90 KIAS
Maximum Demonstrated Crosswind Velocity:	
Takeoff or Landing	15 KNOTS

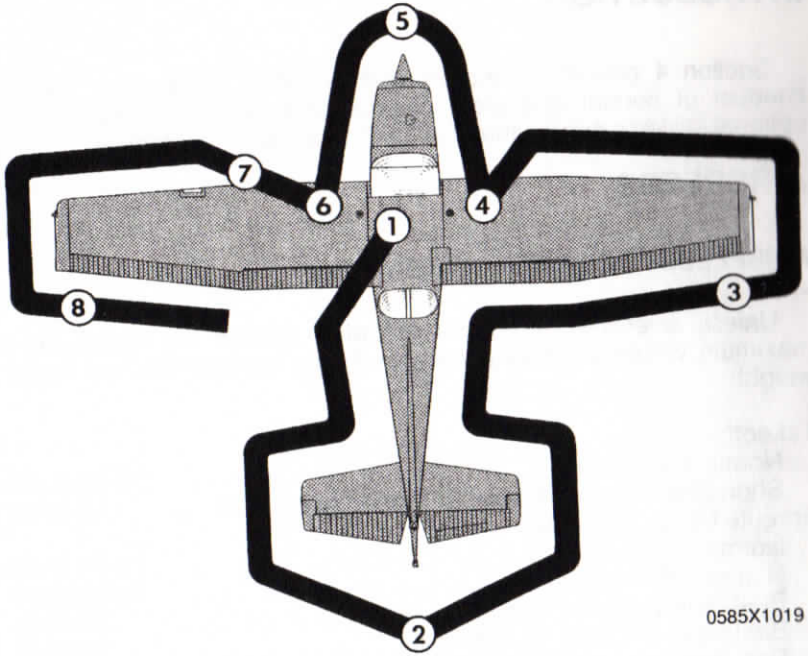

0585X1019

NOTE

Visually check airplane for general condition during walk-around inspection. Airplane should be parked in a normal ground attitude (refer to Figure 1-1) to ensure that fuel drain valves allow for accurate sampling. Use of the refueling steps and assist handles will simplify access to the upper wing surfaces for visual checks and refueling operations. In cold weather, remove even small accumulations of frost, ice or snow from wing, tail and control surfaces. Also, make sure that control surfaces contain no internal accumulations of ice or debris. Prior to flight, check that pitot heater is warm to touch within 30 seconds with battery and pitot heat switches on. If a night flight is planned, check operation of all lights, and make sure a flashlight is available.

Figure 4-1. Preflight Inspection

CHECKLIST PROCEDURES

PREFLIGHT INSPECTION

(1) CABIN

1. Pitot Tube Cover -- REMOVE. Check for pitot blockage.
2. Pilot's Operating Handbook -- AVAILABLE IN THE AIRPLANE.
3. Airplane Weight and Balance -- CHECKED.
4. Parking Brake -- SET.
5. Control Wheel Lock -- REMOVE.
6. Ignition Switch -- OFF.
7. Avionics Master Switch -- OFF.

⚠ WARNING

WHEN TURNING ON THE MASTER SWITCH, USING AN EXTERNAL POWER SOURCE, OR PULLING THE PROPELLER THROUGH BY HAND, TREAT THE PROPELLER AS IF THE IGNITION SWITCH WERE ON. DO NOT STAND, NOR ALLOW ANYONE ELSE TO STAND, WITHIN THE ARC OF THE PROPELLER, SINCE A LOOSE OR BROKEN WIRE OR A COMPONENT MALFUNCTION COULD CAUSE THE PROPELLER TO ROTATE.

8. Master Switch -- ON.
9. Fuel Quantity Indicators -- CHECK QUANTITY and ENSURE LOW FUEL ANNUNCIATORS (L LOW FUEL R) ARE EXTINGUISHED.
10. Avionics Master Switch -- ON.
11. Avionics Cooling Fan -- CHECK AUDIBLY FOR OPERATION.
12. Avionics Master Switch -- OFF.
13. Static Pressure Alternate Source Valve -- OFF.
14. Annunciator Panel Switch -- PLACE AND HOLD IN TST POSITION and ensure all annunciators illuminate.

15. Annunciator Panel Test Switch -- RELEASE. Check that appropriate annunciators remain on.

NOTE

When Master Switch is turned ON, some annunciators will flash for approximately 10 seconds before illuminating steadily. When panel TST switch is toggled up and held in position, all remaining lights will flash until the switch is released.

16. Fuel Selector Valve -- BOTH.
17. Fuel Shutoff Valve -- ON (Push Full In).
18. Flaps -- EXTEND.
19. Pitot Heat -- ON. (Carefully check that pitot tube is warm to touch within 30 seconds.)
20. Pitot Heat -- OFF.
21. Master Switch -- OFF.
22. Elevator Trim -- SET for takeoff.
23. Baggage Door -- CHECK, lock with key.
24. Autopilot Static Source Opening (if installed) -- CHECK for blockage.

(2) EMPENNAGE

1. Rudder Gust Lock (if installed) -- REMOVE.
2. Tail Tie-Down -- DISCONNECT.
3. Control Surfaces -- CHECK freedom of movement and security.
4. Trim Tab -- CHECK security.
5. Antennas -- CHECK for security of attachment and general condition.

(3) RIGHT WING Trailing Edge

1. Aileron -- CHECK freedom of movement and security.
2. Flap -- CHECK for security and condition.

(4) RIGHT WING

1. Wing Tie-Down -- DISCONNECT.

2. Main Wheel Tire -- CHECK for proper inflation and general condition (weather checks, tread depth and wear, etc...).
3. Fuel Tank Sump Quick Drain Valves -- DRAIN at least a cupful of fuel (using sampler cup) from each sump location to check for water, sediment, and proper fuel grade before each flight and after each refueling. If water is observed, take further samples until clear and then gently rock wings and lower tail to the ground to move any additional contaminants to the sampling points. Take repeated samples from **all** fuel drain points until **all** contamination has been removed. If contaminants are still present, refer to WARNING below and do not fly airplane.

⚠ WARNING

IF, AFTER REPEATED SAMPLING, EVIDENCE OF CONTAMINATION STILL EXISTS, THE AIRPLANE SHOULD NOT BE FLOWN. TANKS SHOULD BE DRAINED AND SYSTEM PURGED BY QUALIFIED MAINTENANCE PERSONNEL. ALL EVIDENCE OF CONTAMINATION MUST BE REMOVED BEFORE FURTHER FLIGHT.

4. Fuel Quantity -- CHECK VISUALLY for desired level.
5. Fuel Filler Cap -- SECURE and VENT UNOBSTRUCTED.

(5) NOSE

1. Fuel Strainer Quick Drain Valve (Located on bottom of fuselage) -- DRAIN at least a cupful of fuel (using sampler cup) from valve to check for water, sediment, and proper fuel grade before each flight and after each refueling. If water is observed, take further samples until clear and then gently rock wings and lower tail to the ground to move any additional contaminants to the sampling points. Take repeated samples from **all** fuel drain points, including the fuel reservoir and fuel selector, until **all** contamination has been removed. If contaminants are still present, refer to WARNING above and do not fly the airplane.

2. Engine Oil Dipstick/Filler Cap -- CHECK oil level, then check dipstick/filler cap SECURE. **Do not operate with less than five quarts.** Fill to eight quarts for extended flight.
3. Engine Cooling Air Inlets -- CLEAR of obstructions.
4. Propeller and Spinner -- CHECK for nicks and security.
5. Air Filter -- CHECK for restrictions by dust or other foreign matter.
6. Nose Wheel Strut and Tire -- CHECK for proper inflation of strut and general condition (weather checks, tread depth and wear, etc...) of tire.
7. Left Static Source Opening -- CHECK for blockage.

(6) LEFT WING

1. Fuel Quantity -- CHECK VISUALLY for desired level.
2. Fuel Filler Cap -- SECURE and VENT UNOBSTRUCTED.
3. Fuel Tank Sump Quick Drain Valves -- DRAIN at least a cupful of fuel (using sampler cup) from each sump location to check for water, sediment, and proper fuel grade before each flight and after each refueling. If water is observed, take further samples until clear and then gently rock wings and lower tail to the ground to move any additional contaminants to the sampling points. Take repeated samples from **all** fuel drain points until **all** contamination has been removed. If contaminants are still present, refer to WARNING on page 4-9 and do not fly airplane.
4. Main Wheel Tire -- CHECK for proper inflation and general condition (weather checks, tread depth and wear, etc...).

(7) LEFT WING Leading Edge

1. Fuel Tank Vent Opening -- CHECK for blockage.
2. Stall Warning Opening -- CHECK for blockage. To check the system, place a clean handkerchief over the vent opening and apply suction; a sound from the warning horn will confirm system operation.
3. Wing Tie-Down -- DISCONNECT.
4. Landing/Taxi Light(s) -- CHECK for condition and cleanliness of cover.

(8) LEFT WING Trailing Edge

1. Aileron-- CHECK for freedom of movement and security.
2. Flap -- CHECK for security and condition.

BEFORE STARTING ENGINE

1. Preflight Inspection -- COMPLETE.
2. Passenger Briefing -- COMPLETE.
3. Seats and Seat Belts -- ADJUST and LOCK. Ensure inertia reel locking.
4. Brakes -- TEST and SET.
5. Circuit Breakers -- CHECK IN.
6. Electrical Equipment -- OFF.

⚠ CAUTION

THE AVIONICS MASTER SWITCH MUST BE OFF DURING ENGINE START TO PREVENT POSSIBLE DAMAGE TO AVIONICS.

7. Avionics Master Switch -- OFF.
8. Fuel Selector Valve -- BOTH.
9. Fuel Shutoff Valve -- ON (push full in).
10. Avionics Circuit Breakers -- CHECK IN.

STARTING ENGINE (With Battery)

1. Throttle -- OPEN 1/4 INCH.
2. Mixture -- IDLE CUTOFF.
3. Propeller Area -- CLEAR.
4. Master Switch -- ON.
5. Flashing Beacon -- ON.

NOTE

If engine is warm, omit priming procedure of steps 6, 7 and 8 below.

6. Auxiliary Fuel Pump Switch -- ON.
7. Mixture -- SET to FULL RICH (full forward) until stable fuel flow is indicated (usually 3 to 5 seconds), then set to IDLE CUTOFF (full aft) position.
8. Auxiliary Fuel Pump Switch -- OFF.
9. Ignition Switch -- START (release when engine starts).
10. Mixture -- ADVANCE smoothly to RICH when engine starts.

NOTE

If engine floods (engine has been primed too much), turn off auxiliary fuel pump, place mixture to idle cutoff, open throttle 1/2 to full, and motor (crank) engine. When engine starts, set mixture to full rich and close throttle promptly.

11. Oil Pressure -- CHECK.
12. Navigation Lights -- ON as required.
13. Avionics Master Switch -- ON.
14. Radios -- ON.
15. Flaps -- RETRACT.

STARTING ENGINE (With External Power)

1. Throttle -- OPEN 1/4 INCH.
2. Mixture -- IDLE CUTOFF.
3. Propeller Area -- CLEAR.
4. Master Switch -- OFF.
5. External Power -- CONNECT to airplane receptacle.
6. Master Switch -- ON.
7. Flashing Beacon -- ON.

NOTE

If engine is warm, omit priming procedure of steps 8, 9 and 10 below.

8. Auxiliary Fuel Pump Switch -- ON.
9. Mixture -- SET to FULL RICH (full forward) until stable fuel flow is indicated (usually 3 to 5 seconds), then set to IDLE CUTOFF (full aft) position.
10. Auxiliary Fuel Pump Switch -- OFF.
11. Ignition Switch -- START (release when engine starts).
12. Mixture -- ADVANCE smoothly to RICH when engine starts.

NOTE

If engine floods (engine has been primed to much), turn off auxiliary fuel pump, set mixture in idle cutoff, open throttle 1/2 to full, and motor (crank) engine. When engine starts, set mixture to full rich and close throttle promptly.

13. Oil Pressure -- CHECK.
14. External Power -- DISCONNECT from airplane receptacle. Secure external power door.
15. Electrical System -- CHECK FOR PROPER OPERATION.
    a. Master Switch -- OFF
    (disconnects both the battery and alternator from the system).

b. Taxi and Landing Light Switches -- ON.
(to provide an initial electrical load on the system).
c. Engine RPM -- REDUCE to idle.
(Minimum alternator output occurs at idle.)
d. Master Switch -- ON (with taxi and landing lights switched on).
(The ammeter should indicate in the negative direction, showing that the alternator output is below the load requirements, but the battery is supplying current to the system.)
e. Engine RPM -- INCREASE to approximately 1500 RPM
(as engine RPM increases, alternator output should increase to meet the system load requirements).
f. Ammeter and Low Voltage Annunciator -- CHECK
(the ammeter should indicate in the positive direction, showing that the alternator is supplying current and the Low Voltage Annunciator (VOLTS) should not be lighted).

NOTE

If the indications, as noted in Step "d" and Step "f", are not observed, the electrical system is not functioning properly. Corrective maintenance must be performed to provide for proper electrical system operation before flight.

16. Navigation Lights -- ON as required.
17. Avionics Master Switch -- ON.
18. Radios -- ON.
19. Flaps -- RETRACT.

BEFORE TAKEOFF

1. Parking Brake -- SET.
2. Passenger Seat Backs -- MOST UPRIGHT POSITION.
3. Seats and Seat Belts -- CHECK SECURE.
4. Cabin Doors -- CLOSED and LOCKED.
5. Flight Controls -- FREE and CORRECT.
6. Flight Instruments -- CHECK and SET.
7. Fuel Quantity -- CHECK.
8. Mixture -- RICH.
9. Fuel Selector Valve -- RECHECK BOTH.
10. Throttle -- 1800 RPM.
    a. Magnetos -- CHECK (RPM drop should not exceed 150 RPM on either magneto or 50 RPM differential between magnetos).
    b. Vacuum Gage -- CHECK.
    c. Engine Instruments and Ammeter -- CHECK.
11. Annunciator Panel -- Ensure no annunciators are illuminated.
12. Throttle -- CHECK IDLE.
13. Throttle -- 1000 RPM or LESS.
14. Throttle Friction Lock -- ADJUST.
15. Strobe Lights -- AS DESIRED.
16. Radios and Avionics -- SET.
17. NAV/GPS Switch (if installed) -- SET.
18. Autopilot (if installed) -- OFF.
19. Manual Electric Trim (if installed) -- CHECK.
20. Elevator Trim -- SET for takeoff.
21. Wing Flaps -- SET for takeoff (0°-10°).
22. Brakes -- RELEASE.

AD2001-06-17 Section 4 "NORMAL PROCEDURES (Before Takeoff) item 13. Throttle: 1 Verify smooth engine operation at idle speed of 575 to 625 RPM or less.

TAKEOFF

NORMAL TAKEOFF

1. Wing Flaps -- 0°-10°.
2. Throttle -- FULL OPEN.
3. Mixture -- RICH (above 3000 feet, LEAN to obtain maximum RPM).
4. Elevator Control -- LIFT NOSE WHEEL (at 55 KIAS).
5. Climb Speed -- 70-80 KIAS.
6. Wing Flaps -- RETRACT.

HORT FIELD TAKEOFF

1. Wing Flaps -- 10°.
2. Brakes -- APPLY.
3. Throttle -- FULL OPEN.
4. Mixture -- RICH (above 3000 feet, LEAN to obtain maximum RPM).
5. Brakes -- RELEASE.
6. Elevator Control -- SLIGHTLY TAIL LOW.
7. Climb Speed -- 56 KIAS (until all obstacles are cleared).
8. Wing Flaps -- RETRACT slowly after reaching 60 KIAS.

NROUTE CLIMB

1. Airspeed -- 70-85 KIAS.
2. Throttle -- FULL OPEN.
3. Mixture -- RICH (above 3000 feet, LEAN to obtain maximum RPM).

RUISE

1. Power -- 2100-2700 RPM (No more than 75% is recommended).
2. Elevator Trim -- ADJUST.
3. Mixture -- LEAN.

ESCENT

1. Power -- AS DESIRED.
2. Mixture -- ADJUST for smooth operation (full rich for idle power).
3. Altimeter -- SET.
4. NAV/GPS Switch -- SET.
5. Fuel Selector Valve -- BOTH.
6. Wing Flaps -- AS DESIRED (0° - 10° below 110 KIAS, 10° - 30° below 85 KIAS).

EFORE LANDING

1. Pilot and Passenger Seat Backs -- MOST UPRIGHT POSITION.
2. Seats and Seat Belts -- SECURED and LOCKED.
3. Fuel Selector Valve -- BOTH.
4. Mixture -- RICH.
5. Landing/Taxi Lights -- ON.
6. Autopilot (if installed) -- OFF.

LANDING

NORMAL LANDING

1. Airspeed -- 65-75 KIAS (flaps UP).
2. Wing Flaps -- AS DESIRED (0°-10° below 110 KIAS, 10°-30° below 85 KIAS).
3. Airspeed -- 60-70 KIAS (flaps DOWN).
4. Touchdown -- MAIN WHEELS FIRST.
5. Landing Roll -- LOWER NOSE WHEEL GENTLY.
6. Braking -- MINIMUM REQUIRED.

SHORT FIELD LANDING

1. Airspeed -- 65-75 KIAS (flaps UP).
2. Wing Flaps -- FULL DOWN (30°).
3. Airspeed -- 61 KIAS (until flare).
4. Power -- REDUCE to idle after clearing obstacle.
5. Touchdown -- MAIN WHEELS FIRST.
6. Brakes -- APPLY HEAVILY.
7. Wing Flaps -- RETRACT.

BALKED LANDING

1. Throttle -- FULL OPEN.
2. Wing Flaps -- RETRACT TO 20°.
3. Climb Speed -- 60 KIAS.
4. Wing Flaps -- 10° (until obstacles are cleared).
   RETRACT (after reaching a safe altitude and 65 KIAS).

AFTER LANDING

1. Wing Flaps -- UP.

SECURING AIRPLANE

1. Parking Brake -- SET.
2. Electrical Equipment, Autopilot (if installed) -- OFF.
3. Avionics Master Switch -- OFF.
4. Mixture -- IDLE CUTOFF (pulled full out).
5. Ignition Switch -- OFF.
6. Master Switch -- OFF.
7. Control Lock -- INSTALL.
8. Fuel Selector Valve -- LEFT or RIGHT to prevent cross feeding.

AMPLIFIED PROCEDURES

PREFLIGHT INSPECTION

The Preflight Inspection, described in Figure 4-1 and adjacent checklist, is required prior to each flight. If the airplane has been in extended storage, has had recent major maintenance, or has been operated from marginal airports, a more extensive exterior inspection is recommended.

After major maintenance has been performed, the flight and trim tab controls should be double checked for free and correct movement and security. The security of all inspection plates on the airplane should be checked following periodic inspections. If the airplane has been waxed or polished, check the external static pressure source hole for stoppage.

If the airplane has been exposed to much ground handling in a crowded hangar, it should be checked for dents and scratches on wings, fuselage, and tail surfaces, damage to navigation and anti-collision lights, damage to nose wheel as a result of exceeding tow limits, and avionics antennas.

Outside storage for long periods may result in dust and dirt accumulation on the induction air filter, obstructions in airspeed system lines, water contaminants in fuel tanks and insect/bird/rodent nests in any opening. If any water is detected in the fuel system, the fuel tank sump quick drain valves, fuel reservoir quick drain valve, and fuel strainer quick drain valve should all be thoroughly drained again. Then, the wings should be gently rocked and the tail lowered to the ground to move any further contaminants to the sampling points. Repeated samples should then be taken at **all** quick drain points until **all** contamination has been removed. If, after repeated sampling, evidence of contamination still exists, the fuel tanks should be completely drained and the fuel system cleaned.

Additionally, if the airplane has been stored outside in windy or gusty areas, or tied down adjacent to taxiing airplanes, special attention should be paid to control surface stops, hinges, and brackets to detect the presence of potential wind damage.

If the airplane has been operated from muddy fields or in snow or slush, check the main and nose gear wheel fairings for obstructions and cleanliness. Operation from a gravel or cinder field will require extra attention to propeller tips and abrasion on leading edges of the horizontal tail. Stone damage to the propeller can seriously reduce the fatigue life of the blades.

Airplanes that are operated from rough fields, especially at high altitudes, are subjected to abnormal landing gear abuse. Frequently check all components of the landing gear, shock strut, tires, and brakes. If the shock strut is insufficiently extended, undue landing and taxi loads will be subjected on the airplane structure.

To prevent loss of fuel in flight, make sure the fuel tank filler caps are tightly sealed after any fuel system check or servicing. Fuel system vents should also be inspected for obstructions, ice or water, especially after exposure to cold, wet weather.

STARTING ENGINE

In cooler weather, the engine compartment temperature drops off rapidly following engine shutdown and the injector nozzle lines remain nearly full of fuel.

However, in warmer weather, engine compartment temperatures may increase rapidly following engine shutdown, and fuel in the lines will vaporize and escape into the intake manifold. Hot weather starting procedures depend considerably on how soon the next engine start is attempted. Within the first 20 to 30 minutes after shutdown, the fuel manifold is adequately primed and the empty injector nozzle lines will fill before the engine dies. However, after approximately 30 minutes, the vaporized fuel in the manifold will have nearly dissipated and some slight "priming" could be required to refill the nozzle lines and keep the engine running after the initial start. Starting a hot engine is facilitated by advancing the mixture control promptly to 1/3 open when the engine starts, and then smoothly to full rich as power develops.

Should the engine tend to die after starting, turn on the auxiliary fuel pump temporarily and adjust the throttle and/or mixture as necessary to keep the engine running. In the event of over priming or flooding, turn off the auxiliary fuel pump, open the throttle from 1/2 to full open, and continue cranking with the mixture full lean. When the engine starts, smoothly advance the mixture control to full rich and retard the throttle to desired idle speed.

If the engine is under primed (most likely in cold weather with a cold engine) it will not start at all, and additional priming will be necessary.

After starting, if the oil pressure gage does not begin to show pressure within 30 seconds in the summer time and approximately one minute in very cold weather, stop the engine and investigate. Lack of oil pressure can cause serious engine damage.

NOTE

Additional details concerning cold weather starting and operation may be found under COLD WEATHER OPERATION paragraphs in this section.

RECOMMENDED STARTER DUTY CYCLE

Crank the starter for 10 seconds followed by a 20 second cool down period. This cycle can be repeated two additional times, followed by a ten minute cool down period before resuming cranking. After cool down, crank the starter again, three cycles of 10 seconds followed by 20 seconds of cool down. If the engine still fails to start, an investigation to determine the cause should be initiated.

LEANING FOR GROUND OPERATIONS

1. For all ground operations, after starting the engine and when the engine is running smoothly:

   a. set the throttle to 1200 RPM.
   b. lean the mixture for maximum RPM.
   c. set the throttle to an RPM appropriate for ground operations (800 to 1000 RPM recommended).

NOTE

If ground operation will be required after the BEFORE TAKEOFF checklist is completed, lean the mixture again (as described above) until ready for the TAKEOFF checklist.

TAXIING

When taxiing, it is important that speed and use of brakes be held to a minimum and that all controls be utilized (Refer to Figure 4-2, Taxiing Diagram) to maintain directional control and balance.

Taxiing over loose gravel or cinders should be done at low engine speed to avoid abrasion and stone damage to the propeller tips.

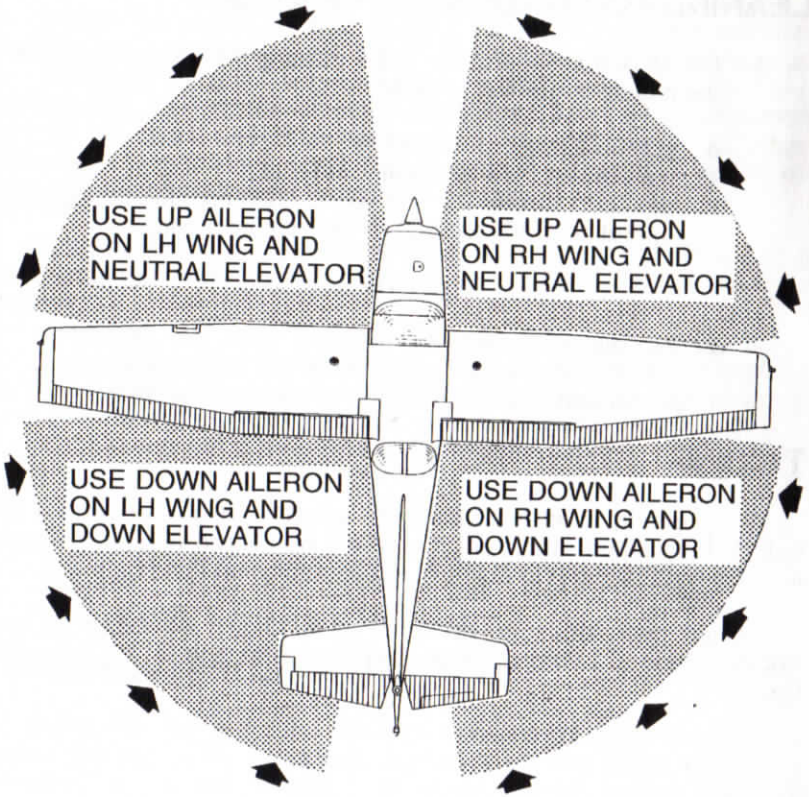

NOTE

Strong quartering tail winds require caution. Avoid sudden bursts of the throttle and sharp braking when the airplane is in this situation. Use the steerable nose wheel and rudder to maintain direction.

0585X1020

Figure 4-2. Taxiing Diagram

BEFORE TAKEOFF

WARM UP

If the engine idles (approximatley 600 RPM) and accelerates smoothly, the airplane is ready for takeoff. Since the engine is closely cowled for efficient in-flight engine cooling, precautions should be taken to avoid overheating during prolonged engine operation on the ground. Also, long periods of idling may cause fouled spark plugs.

MAGNETO CHECK

The magneto check should be made at 1800 RPM as follows. Move ignition switch first to R position and note RPM. Next move switch back to BOTH to clear the other set of plugs. Then move switch to the L position, note RPM and return the switch to the BOTH position. RPM drop should not exceed 150 RPM on either magneto or show greater than 50 RPM differential between magnetos. If there is a doubt concerning operation of the ignition system, RPM checks at higher engine speeds will usually confirm whether a deficiency exists.

An absence of RPM drop may be an indication of faulty grounding of one side of the ignition system or should be cause for suspicion that the magneto timing is set in advance of the setting specified.

ALTERNATOR CHECK

Prior to flights where verification of proper alternator and alternator control unit operation is essential (such as night or instrument flights), a positive verification can be made by loading the electrical system momentarily (3 to 5 seconds) with the landing light or by operating the wing flaps during the engine runup (1800 RPM). The ammeter will remain within a needle width of its initial reading if the alternator and alternator control unit are operating properly.

LANDING LIGHTS

If landing lights are to be used to enhance the visibility of the airplane in the traffic pattern or enroute, it is recommended that only the taxi light be used. This will extend the service life of the landing light appreciably.

TAKEOFF

POWER CHECK

It is important to check full throttle engine operation early in the takeoff roll. Any sign of rough engine operation or sluggish engine acceleration is good cause for discontinuing the takeoff. If this occurs, you are justified in making a thorough full throttle static runup before another takeoff is attempted. The engine should run smoothly and turn approximately 2300 - 2400 RPM with mixture leaned to provide maximum RPM.

Full throttle run ups over loose gravel are especially harmful to propeller tips. When takeoffs must be made over a gravel surface, it is very important that the throttle be advanced slowly. This allows the airplane to start rolling before high RPM is developed, and the gravel will be blown back of the propeller rather than pulled into it. When unavoidable small dents appear in the propeller blades, they should be immediately corrected as described in Section 8 under Propeller Care.

Prior to takeoff from fields above 3000 feet elevation, the mixture should be leaned to give maximum RPM in a full throttle, static runup.

After full throttle is applied, adjust the throttle friction lock clockwise to prevent the throttle from creeping back from a maximum power position. Similar friction lock adjustments should be made as required in other flight conditions to maintain a fixed throttle setting.

WING FLAP SETTINGS

Normal takeoffs are accomplished with wing flaps 0°-10°. Using 10° wing flaps reduces the ground roll and total distance over an obstacle by approximately 10 percent. **Flap deflections greater than 10° are not approved for takeoff**. If 10° wing flaps are used for takeoff, they should be left down until all obstacles are cleared and a safe flap retraction speed of 60 KIAS is reached. On a short field, 10° wing flaps and an obstacle clearance speed of 56 KIAS should be used.

Soft or rough field takeoffs are performed with 10° flaps by lifting the airplane off the ground as soon as practical in a slightly tail low attitude. If no obstacles are ahead, the airplane should be leveled off immediately to accelerate to a higher climb speed. When departing a soft field with an aft C.G. loading, the elevator trim should be adjusted towards the nose down direction to give comfortable control wheel forces during the initial climb.

CROSSWIND TAKEOFF

Takeoffs into strong crosswind conditions normally are performed with the minimum flap setting necessary for the field length, to minimize the drift angle immediately after takeoff. With the ailerons partially deflected into the wind, the airplane is accelerated to a speed slightly higher than normal, then pulled off briskly to prevent possible settling back to the runway while drifting. When clear of the ground, make a coordinated turn into the wind to correct for drift.

ENROUTE CLIMB

Normal enroute climbs are performed with flaps up and **full throttle** and at speeds 5 to 10 knots higher than best rate-of-climb speeds for the best combination of performance, visibility and engine cooling. The mixture should be **full rich** below 3000 feet and may be leaned above 3000 feet for smoother operation or to obtain maximum RPM. For maximum rate of climb, use the best rate-of-climb speeds showing in the Rate of Climb chart in Section 5. If an obstruction dictates the use of a steep climb angle, the best angle-of-climb speed should be used with flaps up and maximum power. Climbs at speeds lower than the best rate-of-climb speed should be of short duration to improve engine cooling.

CRUISE

Normal cruise is performed between 45% and 75% power. The engine RPM and corresponding fuel consumption for various altitudes can be determined by using the data in Section 5.

NOTE

Cruising should be done at 75% power as much as practicable until a total of 50 hours has accumulated or oil consumption has stabilized. Operation at this higher power will ensure proper seating of the rings and is applicable to new engines, and engines in service following cylinder replacement or top overhaul of one or more cylinders.

The Cruise Performance charts in Section 5 provide the pilot with detailed information concerning the cruise performance of the Model 172S in still air. Power and altitude, as well as winds aloft, have a strong influence on the time and fuel needed to complete any flight.

The Cruise Performance Table, Figure 4-3, illustrates the true airspeed and nautical miles per gallon during cruise for various altitudes and percent powers, and is based on standard conditions and zero wind. This table should be used as a guide, along with the available winds aloft information, to determine the most favorable altitude and power setting for a given trip. The selection of cruise altitude on the basis of the most favorable wind conditions and the use of low power settings are significant factors that should be considered on every trip to reduce fuel consumption.

In addition to power settings, proper leaning techniques also contribute to greater range and are figured into cruise performance tables. To achieve the recommended lean mixture fuel consumption figures shown in Section 5, the mixture should be leaned using the exhaust gas temperature (EGT) indicator as noted.

NOTE

At lower power it may be necessary to richen the mixture slightly to obtain smooth operation.

ALTITUDE	75% POWER		65% POWER		55% POWER	
	KTAS	NMPG	KTAS	NMPG	KTAS	NMPG
Sea Level	114	11.2	108	12.0	101	12.8
4000 feet	119	11.7	112	12.4	104	13.2
8000 feet	124	12.2	117	12.9	107	13.6

Figure 4-3. Cruise Performance Table

LEANING WITH AN EGT INDICATOR

At or below 75% power in level cruise flight, the exhaust gas temperature (EGT) indicator is used to lean the fuel-air mixture for best performance or economy. The Cruise Performance charts in Section 5 are based on the EGT to adjust the mixture to Recommended Lean per Figure 4-4.

MIXTURE DESCRIPTION	EXHAUST GAS TEMPERATURE
RECOMMENDED LEAN (Pilot's Operating Handbook)	50° Rich of Peak EGT
BEST ECONOMY	Peak EGT

Figure 4-4. EGT Table

Use the mixture control vernier adjustment (rotate the knob CCW to lean the mixture) to **slowly** lean, from full rich or maximum RPM mixture, while monitoring the EGT indicator. As the EGT indication begins to increase, continue to **slowly** lean the mixture until an EGT indication decrease is just detectable. Reverse the adjustment **slowly** in the rich direction until an EGT indication decrease is again just detectable, then set the EGT index pointer to match the peak indication. The mixture may be leaned slightly to return to peak EGT or may be further richened to Recommended Lean mixture as desired. **Continuous operation at mixture settings lean of peak EGT is prohibited.** Any change in altitude or throttle position will require that peak EGT be redetermined and the desired mixture be reset. Under some conditions, engine roughness may occur at peak EGT. In this case, operate at Recommended Lean mixture.

As noted in Figure 4-4, operation at peak EGT provides the best fuel economy. Operation at peak EGT results in approximately 4% greater range and approximately a 3 knot decrease in airspeed from the figures shown in the Performance section of this handbook. Recommended Lean mixture provides best level cruise performance (generally close to "best power" or maximum RPM).

NOTE

The EGT indicator requires several seconds to respond to mixture adjustments and changes in exhaust gas temperature. More rapid changes in EGT indication are neither necessary nor desirable. Determining peak EGT and setting the desired mixture should take approximately one minute when the adjustments are made sufficiently slowly and accurately.

FUEL SAVINGS PROCEDURES FOR FLIGHT TRAINING OPERATIONS

For best fuel economy during flight training operations, the following procedures are recommended.

1. After engine start and for all ground operations, set the throttle to 1200 RPM and lean the mixture for maximum RPM. Leave the mixture at this setting until beginning the BEFORE TAKEOFF checklist. After the BEFORE TAKEOFF checklist is complete re-lean the mixture as described above until ready for the TAKEOFF checklist.
2. Lean the mixture for maximum RPM during full throttle climbs above 3000 feet. The mixture may remain leaned (maximum RPM at full throttle) for practicing maneuvers such as stalls and slow flight.
3. Lean the mixture for maximum RPM during all operations at any altitude, including those below 3000 feet, when using 75% or less power.

NOTE

- When cruising or maneuvering at 80% or less power, the mixture may be further leaned until the EGT indicator needle peaks and is then enrichened 50°F. This is especially applicable to cross-country training flights, but should be practiced during transition flight to and from the practice area as well.
- Using the above recommended procedures can provide fuel savings in excess of 5% when compared to typical training operations at full rich mixture. In addition, the above procedures will minimize spark plug fouling since the reduction in fuel consumption results in a proportional reduction in tetraethyl lead passing through the engine.

FUEL VAPOR PROCEDURES

The engine fuel system can become susceptible to fuel vapor formation on the ground during warm weather. This will generally occur when the outside ambient air temperature is above 80°F. The situation is further aggravated by the fact that the engine fuel flows are lower at idle and taxi engine speeds. When vapor occurs as evidenced by idle engine speed and fuel flow fluctuations, the following procedures are recommended.

1. With the mixture full rich, set the throttle at 1800 RPM to 2000 RPM. Maintain this power setting for 1 to 2 minutes or until smooth engine operation returns.
2. Retard the throttle to idle to verify normal engine operation.
3. Advance the throttle to 1200 RPM and lean the mixture as described under FUEL SAVINGS PROCEDURES FOR FLIGHT TRAINING OPERATIONS.
4. Just prior to TAKEOFF, apply full throttle, for approximately 10 seconds to verify smooth engine operation for takeoff.

NOTE

When the engine is operated above 1800 RPM, the resulting increased fuel flow also makes for lower fuel temperatures throughout the engine fuel system. This increased flow purges the fuel vapor and the cooler fuel minimizes vapor formation.

In addition to the above procedures, the sections below should be reviewed and where applicable, adhered to:

Section 2 --	Take note of the placard on "When Switching From Dry Tank".
Section 3 --	Take note of the excessive fuel vapor procedures in both the checklist and the amplified procedures sections.
Section 4 --	Take note of the hot weather operational notes and procedures in both the checklist and the amplified procedures sections.
Section 7 --	Take note of the altitude operational procedures and the section on auxiliary fuel pump operation.

STALLS

The stall characteristics are conventional and aural warning is provided by a stall warning horn which sounds between 5 and 10 knots above the stall in all configurations.

Power off stall speeds at maximum weight for both forward and aft C.G. positions are presented in Section 5.

SPINS

Intentional spins are approved when the airplane is operated in the utility category. Spins with baggage loadings or occupied rear seat(s) are not approved.

However, before attempting to perform spins several items should be carefully considered to assure a safe flight. No spins should be attempted without first having received dual instruction both in spin entries and spin recoveries from a qualified instructor who is familiar with the spin characteristics of the Cessna 172S.

The cabin should be clean and all loose equipment (including the microphone and rear seat belts) should be stowed or secured. For a solo flight in which spins will be conducted, the copilot's seat belt and shoulder harness should also be secured. Care should be taken to ensure that the pilot can easily reach the flight controls and produce maximum control travels.

It is recommended that, where feasible, entries be accomplished at high enough altitude that recoveries are completed 4000 feet or more above ground level. At least 1000 feet of altitude loss should be allowed for a 1-turn spin and recovery, while a 6-turn spin and recovery may require somewhat more than twice that amount. For example, the recommended entry altitude for a 6-turn spin would be 6000 feet above ground level. In any case, entries should be planned so that recoveries are completed well above the minimum 1500 feet above ground level required by FAR 91.303. Another reason for using high altitudes for practicing spins is that a greater field of view is provided which will assist in maintaining pilot orientation.

The normal entry is made from a power off stall. As the stall is approached, the elevator control should be smoothly pulled to the full aft position. Just prior to reaching the stall "break", rudder control in the desired direction of the spin rotation should be applied so that full rudder deflection is reached almost simultaneously with reaching full aft elevator. A slightly greater rate of deceleration than for normal stall entries, application of ailerons in the direction of the desired spin, and the use of power at the entry will assure more consistent and positive entries to the spin. As the airplane begins to spin, reduce the power to idle and return the ailerons to neutral. Both elevator and rudder controls should be held full with the spin until the spin recovery is initiated. An inadvertent relaxation of either of these controls could result in the development of a nose down spiral.

For the purpose of training in spins and spin recoveries, a 1 or 2 turn spin is adequate and should be used. Up to 2 turns, the spin will progress to a fairly rapid rate of rotation and a steep attitude. Application of recovery controls will produce prompt recoveries (within 1/4 turn). During extended spins of two to three turns or more, the spin will tend to change into a spiral, particularly to the right. This will be accompanied by an increase in airspeed and gravity loads on the airplane. If this occurs, recovery should be accomplished promptly but smoothly by leveling the wings and recovering from the resulting dive.

Regardless of how many turns the spin is held or how it is entered, the following recovery technique should be used:

1. VERIFY THAT THROTTLE IS IN IDLE POSITION AND AILERONS ARE NEUTRAL.
2. APPLY AND **HOLD** FULL RUDDER OPPOSITE TO THE DIRECTION OF ROTATION.
3. JUST **AFTER** THE RUDDER REACHES THE STOP, MOVE THE CONTROL WHEEL **BRISKLY** FORWARD FAR ENOUGH TO BREAK THE STALL.
4. **HOLD** THESE CONTROL INPUTS UNTIL ROTATION STOPS.
5. AS ROTATION STOPS, NEUTRALIZE RUDDER, AND MAKE A SMOOTH RECOVERY FROM THE RESULTING DIVE.

NOTE

If disorientation precludes a visual determination of the direction of rotation, the symbolic airplane in the turn coordinator may be referred to for this information.

Variations in basic airplane rigging or in weight and balance due installed equipment or right seat occupancy can cause ferences in behavior, particularly in extended spins. These ferences are normal and will result in variations in the spin aracteristics and in the spiraling tendencies for spins of more than turns. However, the recovery technique should always be used d will result in the most expeditious recovery from any spin.

Intentional spins with flaps extended are prohibited, since the gh speeds which may occur during recovery are potentially maging to the flap/wing structure.

ANDING

ORMAL LANDING

Normal landing approaches can be made with power on or power with any flap setting desired. Surface winds and air turbulence e usually the primary factors in determining the most comfortable proach speeds. Steep slips should be avoided with flap settings eater than 20° due to a slight tendency for the elevator to oscillate der certain combinations of airspeed, sideslip angle, and center gravity loadings.

Actual touchdown should be made with power off and on the ain wheels first to reduce the landing speed and subsequent need braking in the landing roll. The nose wheel is lowered to the nway gently after the speed has diminished to avoid unnecessary se gear loads. This procedure is especially important in rough or ft field landings.

SHORT FIELD LANDING

For a short field landing in smooth air conditions, make an approach at 61 KIAS with 30° flaps using enough power to control the glide path. (Slightly higher approach speeds should be used under turbulent air conditions.) After all approach obstacles are cleared, progressively reduce power and maintain the approach speed by lowering the nose of the airplane. Touchdown should be made with power off and on the main wheels first. Immediately after touchdown, lower the nose wheel and apply heavy braking as required. For maximum brake effectiveness, retract the flaps, hold the control wheel full back, and apply maximum brake pressure without sliding the tires.

CROSSWIND LANDING

When landing in a strong crosswind, use the minimum flap setting required for the field length. If flap settings greater than 20° are used in sideslips with full rudder deflection, some elevator oscillation may be felt at normal approach speeds. However, this does not affect control of the airplane. Although the crab or combination method of drift correction may be used, the wing low method gives the best control. After touchdown, hold a straight course with the steerable nose wheel and occasional braking if necessary.

The maximum allowable crosswind velocity is dependent upon pilot capability as well as airplane limitations. Operation in direct crosswinds of 15 knots has been demonstrated.

BALKED LANDING

In a balked landing (go-around) climb, reduce the flap setting to 20° immediately after full power is applied. If obstacles must be cleared during the go-around climb, reduce the wing flap setting to 10° and maintain a safe airspeed until the obstacles are cleared. Above 3000 feet, lean the mixture to obtain maximum RPM. After clearing any obstacles, the flaps may be retracted as the airplane accelerates to the normal flaps up climb speed.

COLD WEATHER OPERATION

Special consideration should be given to the operation of the irplane fuel system during the winter season or prior to any flight in old temperatures. Proper preflight draining of the fuel system is specially important and will eliminate any free water accumulation. The use of additives such as isopropyl alcohol or diethylene glycol nonomethyl ether may also be desirable. Refer to Section 8 for nformation on the proper use of additives.

Cold weather often causes conditions which require special care uring airplane operations. Even small accumulations of frost, ice, r snow must be removed, particularly from wing, tail and all control urfaces to assure satisfactory flight performance and handling. lso, control surfaces must be free of any internal accumulations of ce or snow.

If snow or slush covers the takeoff surface, allowance must be nade for takeoff distances which will be increasingly extended as he snow or slush depth increases. The depth and consistency of his cover can, in fact, prevent takeoff in many instances.

⚠ WARNING

WHEN PULLING THE PROPELLER THROUGH BY HAND, TREAT IT AS IF THE IGNITION SWITCH IS TURNED ON. A LOOSE OR BROKEN GROUND WIRE ON EITHER MAGNETO COULD CAUSE THE ENGINE TO FIRE.

Prior to starting on cold mornings, it is advisable to pull the ropeller through several times by hand to "break loose" or imber" the oil, thus conserving battery energy.

When air temperatures are below 20°F (-6°C), the use of an xternal preheater and an external power source are recommended henever possible to obtain positive starting and to reduce wear nd abuse to the engine and electrical system. Preheat will thaw the l trapped in the oil cooler, which probably will be congealed prior starting in extremely cold temperatures.

When using an external power source, the master switch must be in the OFF position before connecting the external power source to the airplane receptacle. See Section 7, Ground Service Plug Receptacle for external power source operations.

Cold weather starting procedures are the same as the normal starting procedures. Use caution to prevent inadvertent forward movement of the airplane during starting when parked on snow or ice.

NOTE

If the engine does not start during the first few attempts, or if engine firing diminishes in strength, it is probable that the spark plugs have been frosted over. Preheat must be used before another start is attempted.

During cold weather operations, no indication will be apparent on the oil temperature gage prior to takeoff if outside air temperatures are very cold. After a suitable warm up period (2 to 5 minutes at 1000 RPM), accelerate the engine several times to higher engine RPM. If the engine accelerates smoothly and the oil pressure remains normal and steady, the airplane is ready for takeoff.

WINTERIZATION KIT

A winterization kit is provided and may be utilized when cold weather operations are conducted.

HOT WEATHER OPERATION

Refer to the general warm temperature starting information under Starting Engine in this section. Avoid prolonged engine operation on the ground.

NOISE CHARACTERISTICS AND NOISE REDUCTION

The certificated noise level for the Model 172S at 2550 pounds maximum weight is 75.1 dB(A). No determination has been made by the Federal Aviation Administration that the noise levels of this airplane are or should be acceptable or unacceptable for operation at, into, or out of, any airport.

The following procedures are suggested to minimize the effect of airplane noise on the public:

1. Pilots operating airplanes under VFR over outdoor assemblies of persons, recreational and park areas, and other noise sensitive areas should make every effort to fly not less than 2000 feet above the surface, weather permitting, even though flight at a lower level may be consistent with the provisions of government regulations.
2. During departure from or approach to an airport, climb after takeoff and descent for landing should be made so as to avoid prolonged flight at low altitude near noise sensitive areas.

NOTE

The above recommended procedures do not apply where they would conflict with Air Traffic Control clearances or instructions, or where, in the pilot's judgment, an altitude of less than 2000 feet is necessary to adequately exercise the duty to see and avoid other airplanes.

SECTION 5
PERFORMANCE

TABLE OF CONTENTS

	Page
Introduction	5-3
Use of Performance Charts	5-3
Sample Problem	5-3
Takeoff	5-4
Cruise	5-5
Fuel Required	5-6
Landing	5-8
Demonstrated Operating Temperature	5-8
Figure 5-1, Airspeed Calibration - Normal Static Source	5-9
Airspeed Calibration - Alternate Static Source	5-10
Figure 5-2, Temperature Conversion Chart	5-11
Figure 5-3, Stall Speeds	5-12
Figure 5-4, Crosswind Components	5-13
Figure 5-5, Short Field Takeoff Distance	5-14
Figure 5-6, Maximum Rate Of Climb	5-17
Figure 5-7, Time, Fuel, And Distance To Climb	5-18
Figure 5-8, Cruise Performance	5-19
Figure 5-9, Range Profile	5-21
Figure 5-10, Endurance Profile	5-22
Figure 5-11, Short Field Landing Distance	5-23

INTRODUCTION

Performance data charts on the following pages are presented so that you may know what to expect from the airplane under various conditions, and also, to facilitate the planning of flights in detail and with reasonable accuracy. The data in the charts has been computed from actual flight tests with the airplane and engine in good condition and approximating average piloting techniques.

It should be noted that performance information presented in the range and endurance profile charts allows for 45 minutes reserve fuel at the specified power setting. Fuel flow data for cruise is based on the recommended lean mixture setting at all altitudes. Some indeterminate variables such as mixture leaning technique, fuel metering characteristics, engine and propeller condition, and air turbulence may account for variations of 10% or more in range and endurance. Therefore, it is important to utilize all available information to estimate the fuel required for the particular flight and to flight plan in a conservative manner.

USE OF PERFORMANCE CHARTS

Performance data is presented in tabular or graphical form to illustrate the effect of different variables. Sufficiently detailed information is provided in the tables so that conservative values can be selected and used to determine the particular performance figure with reasonable accuracy.

SAMPLE PROBLEM

The following sample flight problem utilizes information from the various charts to determine the predicted performance data for a typical flight. Assume the following information has already been determined:

AIRPLANE CONFIGURATION:	
Takeoff weight	2550 Pounds
Usable fuel	53 Gallons
TAKEOFF CONDITIONS:	
Field pressure altitude	1500 Feet
Temperature	28°C (16°C Above Standard)
Wind component along runway	12 Knot Headwind
Field length	3500 Feet

CRUISE CONDITIONS:

Total distance	360 Nautical Miles
Pressure altitude	7500 Feet
Temperature	16°C (16°C Above Standard)
Expected wind enroute	10 Knot Headwind

LANDING CONDITIONS:

Field pressure altitude	2000 Feet
Temperature	25°C
Field length	3000 Feet

TAKEOFF

The takeoff distance chart, Figure 5-5, should be consulted, keeping in mind that distances shown are based on the short field technique. Conservative distances can be established by reading the chart at the next higher value of weight, altitude and temperature. For example, in this particular sample problem, the takeoff distance information presented for a weight of 2550 pounds, pressure altitude of 2000 feet and a temperature of 30°C should be used and results in the following:

Ground roll	1285 Feet
Total distance to clear a 50-foot obstacle	2190 Feet

These distances are well within the available takeoff field length. However, a correction for the effect of wind may be made based on Note 3 of the takeoff chart. The correction for a 12 knot headwind is:

$$\frac{12 \text{ Knots}}{9 \text{ Knots}} \times 10\% = 13\% \text{ Decrease}$$

This results in the following distances, corrected for wind:

Ground roll, zero wind	1285
Decrease in ground roll (1285 feet X 13%)	-167
Corrected ground roll	1118 Feet

Total distance to clear a 50-foot obstacle, zero wind	2190
Decrease in total distance (2190 feet X 13%)	- 285
Corrected total distance to clear 50-foot obstacle	1905 Feet

CRUISE

The cruising altitude should be selected based on a consideration of trip length, winds aloft, and the airplane's performance. A typical cruising altitude and the expected wind enroute have been given for this sample problem. However, the power setting selection for cruise must be determined based on several considerations. These include the cruise performance characteristics presented in Figure 5-8, the range profile chart presented in Figure 5-9, and the endurance profile chart presented in Figure 5-10.

The relationship between power and range is illustrated by the range profile chart. Considerable fuel savings and longer range result when lower power settings are used. For this sample problem, a cruise power of approximately 65% will be used.

The cruise performance chart, Figure 5-8, is entered at 8000 feet pressure altitude and 20°C above standard temperature. These values most nearly correspond to the planned altitude and expected temperature conditions. The engine speed chosen is 2600 RPM, which results in the following:

Power	64%
True airspeed	117 Knots
Cruise fuel flow	8.9 GPH

FUEL REQUIRED

The total fuel requirement for the flight may be estimated using the performance information in Figure 5-7 and Figure 5-8. For this sample problem, Figure 5-7 shows that a climb from 2000 feet to 8000 feet requires 2.2 gallons of fuel. The corresponding distance during the climb is 15 nautical miles. These values are for a standard temperature and are sufficiently accurate for most flight planning purposes. However, a further correction for the effect of temperature may be made as noted on the climb chart. The approximate effect of a non-standard temperature is to increase the time, fuel, and distance by 10% for each 10°C above standard temperature, due to the lower rate of climb. In this case, assuming a temperature 16°C above standard (16°C - 0°C), the correction would be:

$$\frac{16°C}{10°C} \text{ X } 10\% = 16\% \text{ Increase}$$

With this factor included, the fuel **estimate** would be calculated as follows:

Fuel to climb, standard temperature	2.2
Increase due to non-standard temperature (2.2 X 16%)	0.4
Corrected fuel to climb	2.6 Gallons

Using a similar procedure for the distance to climb results in 18 nautical miles. (15 nm using chart + 2.4 nm to correct for higher than standard temperature = 17.4 nm. Rounded up to 18 nm.)

The resultant cruise distance is:

Total distance	360
Climb distance	-18
Cruise distance	342 nm

With an expected 10 knot headwind, the ground speed for cruise is predicted to be:

117
-10

107 Knots

Therefore, the time required for the cruise portion of the trip is:

$$\frac{342 \text{ Nautical Miles}}{107 \text{ Knots}} = 3.2 \text{ Hours}$$

The fuel required for cruise is:

3.2 hours X 8.9 gallons/hour = 28.5 Gallons

A 45-minute reserve requires:

$$\frac{45}{60} \text{ X } 8.9 \text{ gallons / hour} = 6.7 \text{ Gallons}$$

The total estimated fuel required is as follows:

Engine start, taxi, and takeoff	1.4
Climb	2.6
Cruise	28.5
Reserve	6.7
Total fuel required	39.2 Gallons

Once the flight is underway, ground speed checks will provide a more accurate basis for estimating the time enroute and the corresponding fuel required to complete the trip with ample reserve.

LANDING

A procedure similar to takeoff should be used for estimating the landing distance at the destination airport. Figure 5-11 presents landing distance information for the short field technique. The distances corresponding to 2000 feet and 30°C are as follows:

Ground roll	650 Feet
Total distance to clear a 50-foot obstacle	1455 Feet

A correction for the effect of wind may be made based on Note 2 of the landing chart, using the same procedure as outlined for takeoff.

DEMONSTRATED OPERATING TEMPERATURE

Satisfactory engine cooling has been demonstrated for this airplane with an outside air temperature 23°C above standard. This is not to be considered as an operating limitation. Reference should be made to Section 2 for engine operating limitations.

AIRSPEED CALIBRATION

NORMAL STATIC SOURCE

CONDITION:

Power required for level flight or maximum power descent.

FLAPS UP												
KIAS	50	60	70	80	90	100	110	120	130	140	150	160
KCAS	56	62	70	78	87	97	107	117	127	137	147	157
FLAPS 10°												
KIAS	40	50	60	70	80	90	100	110	---	---	---	---
KCAS	51	57	63	71	80	89	99	109	---	---	---	---
FLAPS 30°												
KIAS	40	50	60	70	80	85	---	---	---	---	---	---
KCAS	50	56	63	72	81	86	---	---	---	---	---	---

Figure 5-1. Airspeed Calibration (Sheet 1 of 2)

AIRSPEED CALIBRATION

ALTERNATE STATIC SOURCE

CONDITION:

Power required for level flight or maximum power descent.

FLAPS UP												
KIAS	50	60	70	80	90	100	110	120	130	140	150	160
KCAS	56	62	68	76	85	95	105	115	125	134	144	154
FLAPS 10°												
KIAS	40	50	60	70	80	90	100	110	---	---	---	---
KCAS	51	55	60	68	77	86	96	105	---	---	---	---
FLAPS 30°												
KIAS	40	50	60	70	80	85	---	---	---	---	---	---
KCAS	49	54	61	69	78	83	---	---	---	---	---	---

NOTE:

Windows closed, ventilators closed, cabin heater, cabin air, and defroster on maximum.

Figure 5-1. Airspeed Calibration (Sheet 2 of 2)

TEMPERATURE CONVERSION CHART

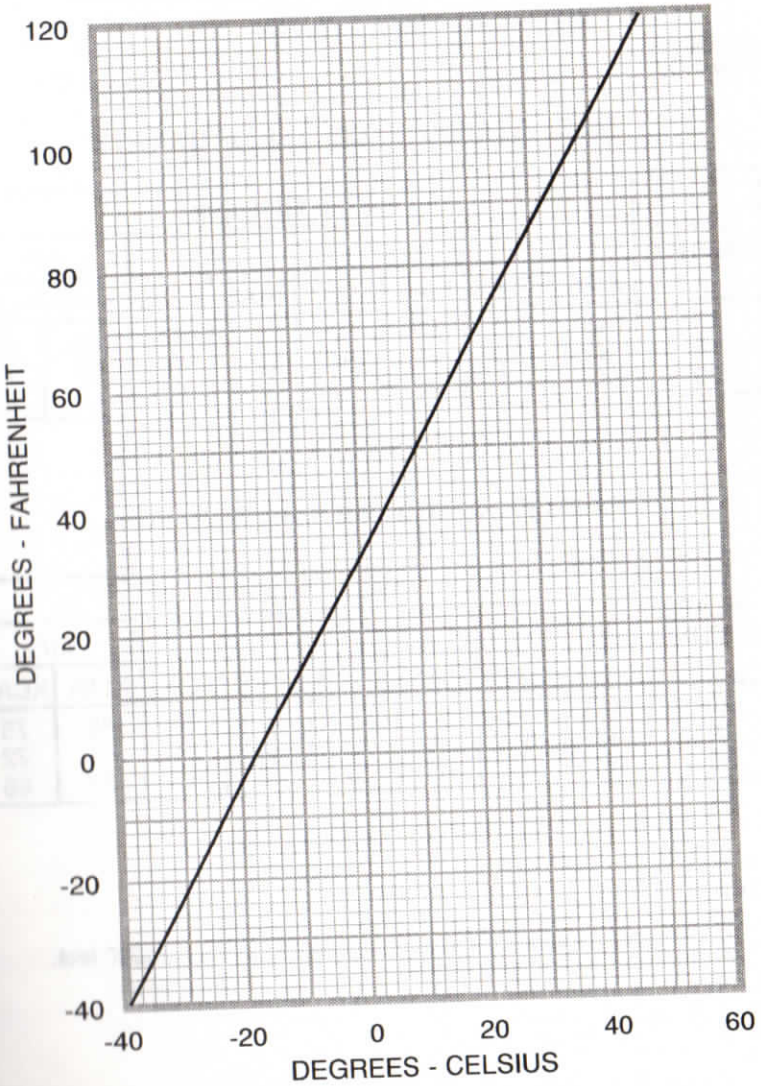

Figure 5-2. Temperature Conversion Chart

STALL SPEEDS AT 2550 POUNDS

Conditions:
Power Off

MOST REARWARD CENTER OF GRAVITY

FLAP SETTING	ANGLE OF BANK							
	0°		30°		45°		60°	
	KIAS	KCAS	KIAS	KCAS	KIAS	KCAS	KIAS	KCAS
UP	48	53	52	57	57	63	68	75
10°	42	50	45	54	50	59	59	71
30°	40	48	43	52	48	57	57	68

MOST FORWARD CENTER OF GRAVITY

FLAP SETTING	ANGLE OF BANK							
	0°		30°		45°		60°	
	KIAS	KCAS	KIAS	KCAS	KIAS	KCAS	KIAS	KCAS
UP	48	53	52	57	57	63	68	75
10°	43	51	46	55	51	61	61	72
30°	40	48	43	52	48	57	57	68

NOTES:

1. Altitude loss during a stall recovery may be as much as 230 feet.
2. KIAS values are approximate.

Figure 5-3. Stall Speeds

WIND COMPONENTS

NOTE:
Maximum demonstrated crosswind velocity is 15 knots (not a limitation).

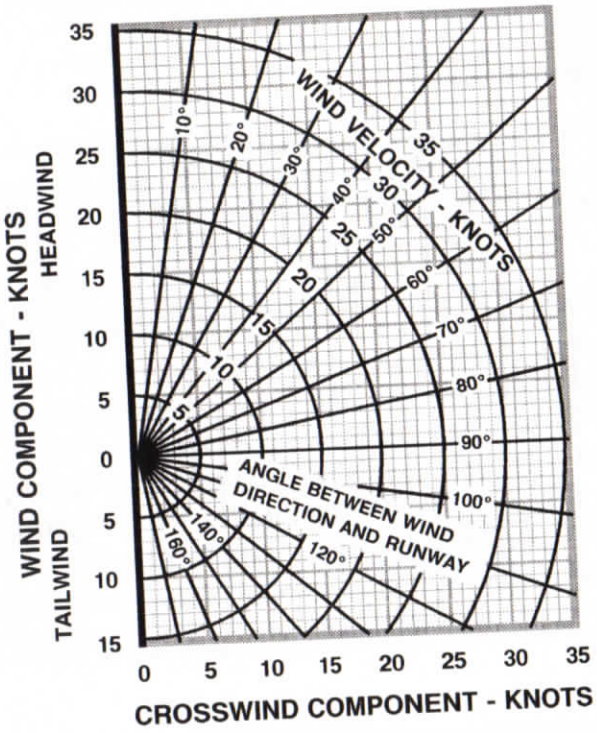

NOTE

Maximum demonstrated crosswind component is 15 knots (not a limitation).

0585C1003

Figure 5-4. Crosswind Components

SHORT FIELD TAKEOFF DISTANCE AT 2550 POUNDS

CONDITIONS:

Flaps 10°
Full Throttle Prior to Brake Release
Paved, level, dry runway
Zero Wind
Lift Off: 51 KIAS
Speed at 50 Ft: 56 KIAS

Press Alt In Feet	0°C		10°C		20°C		30°C		40°C	
	Grnd Roll Ft	Total Ft To Clear 50 Ft Obst	Grnd Roll Ft	Total Ft To Clear 50 Ft Obst	Grnd Roll Ft	Total Ft To Clear 50 Ft Obst	Grnd Roll Ft	Total Ft To Clear 50 Ft Obst	Grnd Roll Ft	Total Ft To Clear 50 Ft Obst
S. L.	860	1465	925	1575	995	1690	1070	1810	1150	1945
1000	940	1600	1010	1720	1090	1850	1170	1990	1260	2135
2000	1025	1755	1110	1890	1195	2035	1285	2190	1380	2355
3000	1125	1925	1215	2080	1310	2240	1410	2420	1515	2605
4000	1235	2120	1335	2295	1440	2480	1550	2685	1660	2880
5000	1355	2345	1465	2545	1585	2755	1705	2975	1825	3205
6000	1495	2605	1615	2830	1745	3075	1875	3320	2010	3585
7000	1645	2910	1785	3170	1920	3440	2065	3730	2215	4045
8000	1820	3265	1970	3575	2120	3880	2280	4225	2450	4615

NOTES:

1. Short field technique as specified in Section 4.
2. Prior to takeoff from fields above 3000 feet elevation, the mixture should be leaned to give maximum RPM in a full throttle, static runup.
3. Decrease distances 10% for each 9 knots headwind. For operation with tail winds up to 10 knots, increase distances by 10% for each 2 knots.
4. For operation on dry, grass runway, increase distances by 15% of the "ground roll" figure.

Figure 5-5. Short Field Takeoff Distance (Sheet 1 of 3)

SHORT FIELD TAKEOFF DISTANCE AT 2400 POUNDS

CONDITIONS:

Flaps 10°
Full Throttle Prior to Brake Release
Paved, level, dry runway
Zero Wind
Lift Off: 48 KIAS
Speed at 50 Ft: 54 KIAS

Press Alt In Feet	0°C		10°C		20°C		30°C		40°C	
	Grnd Roll Ft	Total Ft To Clear 50 Ft Obst	Grnd Roll Ft	Total Ft To Clear 50 Ft Obst	Grnd Roll Ft	Total Ft To Clear 50 Ft Obst	Grnd Roll Ft	Total Ft To Clear 50 Ft Obst	Grnd Roll Ft	Total Ft To Clear 50 Ft Obst
S. L.	745	1275	800	1370	860	1470	925	1570	995	1685
1000	810	1390	875	1495	940	1605	1010	1720	1085	1845
2000	885	1520	955	1635	1030	1760	1110	1890	1190	2030
3000	970	1665	1050	1795	1130	1930	1215	2080	1305	2230
4000	1065	1830	1150	1975	1240	2130	1335	2295	1430	2455
5000	1170	2015	1265	2180	1360	2355	1465	2530	1570	2715
6000	1285	2230	1390	2410	1500	2610	1610	2805	1725	3015
7000	1415	2470	1530	2685	1650	2900	1770	3125	1900	3370
8000	1560	2755	1690	3000	1815	3240	1950	3500	2095	3790

NOTES:

1. Short field technique as specified in Section 4.
2. Prior to takeoff from fields above 3000 feet elevation, the mixture should be leaned to give maximum RPM in a full throttle, static runup.
3. Decrease distances 10% for each 9 knots headwind. For operation with tail winds up to 10 knots, increase distances by 10% for each 2 knots.
4. For operation on dry, grass runway, increase distances by 15% of the "ground roll" figure.

Figure 5-5. Short Field Takeoff Distance (Sheet 2 of 3)

SHORT FIELD TAKEOFF DISTANCE AT 2200 POUNDS

CONDITIONS:

Flaps 10°
Full Throttle Prior to Brake Release
Paved, level, dry runway
Zero Wind
Lift Off: 44 KIAS
Speed at 50 Ft: 50 KIAS

Press Alt In Feet	0°C		10°C		20°C		30°C		40°C	
	Grnd Roll Ft	Total Ft To Clear 50 Ft Obst	Grnd Roll Ft	Total Ft To Clear 50 Ft Obst	Grnd Roll Ft	Total Ft To Clear 50 Ft Obst	Grnd Roll Ft	Total Ft To Clear 50 Ft Obst	Grnd Roll Ft	Total Ft To Clear 50 Ft Obst
S. L.	610	1055	655	1130	705	1205	760	1290	815	1380
1000	665	1145	720	1230	770	1315	830	1410	890	1505
2000	725	1250	785	1340	845	1435	905	1540	975	1650
3000	795	1365	860	1465	925	1570	995	1685	1065	1805
4000	870	1490	940	1605	1010	1725	1090	1855	1165	1975
5000	955	1635	1030	1765	1110	1900	1195	2035	1275	2175
6000	1050	1800	1130	1940	1220	2090	1310	2240	1400	2395
7000	1150	1985	1245	2145	1340	2305	1435	2475	1540	2650
8000	1270	2195	1370	2375	1475	2555	1580	2745	1695	2950

NOTES:

1. Short field technique as specified in Section 4.
2. Prior to takeoff from fields above 3000 feet elevation, the mixture should be leaned to give maximum RPM in a full throttle, static runup.
3. Decrease distances 10% for each 9 knots headwind. For operation with tail winds up to 10 knots, increase distances by 10% for each 2 knots.
4. For operation on dry, grass runway, increase distances by 15% of the "ground roll" figure.

Figure 5-5. Short Field Takeoff Distance (Sheet 3 of 3)

MAXIMUM RATE-OF-CLIMB AT 2550 POUNDS

CONDITIONS:

Flaps Up
Full Throttle

PRESS ALT FT	CLIMB SPEED KIAS	RATE OF CLIMB - FPM			
		-20°C	0°C	20°C	40°C
S.L.	74	855	785	710	645
2000	73	760	695	625	560
4000	73	685	620	555	495
6000	73	575	515	450	390
8000	72	465	405	345	285
10,000	72	360	300	240	180
12,000	72	255	195	135	- - -

NOTE:

1. Mixture leaned above 3,000 feet for maximum RPM.

Figure 5-6. Maximum Rate of Climb

TIME, FUEL AND DISTANCE TO CLIMB AT 2550 POUNDS

CONDITIONS:

Flaps Up
Full Throttle
Standard Temperature

PRESS ALT FT	CLIMB SPEED KIAS	RATE OF CLIMB FPM	FROM SEA LEVEL		
			TIME IN MIN	FUEL USED GAL	DIST NM
S.L.	74	730	0	0.0	0
1000	73	695	1	0.4	2
2000	73	655	3	0.8	4
3000	73	620	4	1.2	6
4000	73	600	6	1.5	8
5000	73	550	8	1.9	10
6000	73	505	10	2.2	13
7000	73	455	12	2.6	16
8000	72	410	14	3.0	19
9000	72	360	17	3.4	22
10,000	72	315	20	3.9	27
11,000	72	265	24	4.4	32
12,000	72	220	28	5.0	38

NOTES:

1. Add 1.4 gallons of fuel for engine start, taxi and takeoff allowance.
2. Mixture leaned above 3,000 feet for maximum RPM.
3. Increase time, fuel and distance by 10% for each 10°C above standard temperature.
4. Distances shown are based on zero wind.

Figure 5-7. Time, Fuel and Distance to Climb

CRUISE PERFORMANCE

CONDITIONS:
2550 Pounds
Recommended Lean Mixture At All Altitudes (Refer to Section 4, Cruise)

PRESS ALT FT	RPM	20°C BELOW STANDARD TEMP			STANDARD TEMPERATURE			20°C ABOVE STANDARD TEMP		
		% BHP	KTAS	GPH	% BHP	KTAS	GPH	% BHP	KTAS	GPH
2000	2550	83	117	11.1	77	118	10.5	72	117	9.9
	2500	78	115	10.6	73	115	9.9	68	115	9.4
	2400	69	111	9.6	64	110	9.0	60	109	8.5
	2300	61	105	8.6	57	104	8.1	53	102	7.7
	2200	53	99	7.7	50	97	7.3	47	95	6.9
	2100	47	92	6.9	44	90	6.6	42	89	6.3
4000	2600	83	120	11.1	77	120	10.4	72	119	9.8
	2550	79	118	10.6	73	117	9.9	68	117	9.4
	2500	74	115	10.1	69	115	9.5	64	114	8.9
	2400	65	110	9.1	61	109	8.5	57	107	8.1
	2300	58	104	8.2	54	102	7.7	51	101	7.3
	2200	51	98	7.4	48	96	7.0	45	94	6.7
	2100	45	91	6.6	42	89	6.4	40	87	6.1
6000	2650	83	122	11.1	77	122	10.4	72	121	9.8
	2600	78	120	10.6	73	119	9.9	68	118	9.4
	2500	70	115	9.6	65	114	9.0	60	112	8.5
	2400	62	109	8.6	57	108	8.2	54	106	7.7
	2300	54	103	7.8	51	101	7.4	48	99	7.0
	2200	48	96	7.1	45	94	6.7	43	92	6.4

Figure 5-8. Cruise Performance (Sheet 1 of 2)

CRUISE PERFORMANCE

CONDITIONS:
2550 Pounds
Recommended Lean Mixture At All Altitudes (Refer to Section 4, Cruise)

PRESS ALT FT	RPM	20°C BELOW STANDARD TEMP			STANDARD TEMPERATURE			20°C ABOVE STANDARD TEMP		
		% BHP	KTAS	GPH	% BHP	KTAS	GPH	% BHP	KTAS	GPH
8000	2700	83	125	11.1	77	124	10.4	71	123	9.7
	2650	78	122	10.5	72	122	9.9	67	120	9.3
	2600	74	120	10.0	68	119	9.4	64	117	8.9
	2500	65	114	9.1	61	112	8.6	57	111	8.1
	2400	58	108	8.2	54	106	7.8	51	104	7.4
	2300	52	101	7.5	48	99	7.1	46	97	6.8
	2200	46	94	6.8	43	92	6.5	41	90	6.2
10,000	2700	78	124	10.5	72	123	9.8	67	122	9.3
	2650	73	122	10.0	68	120	9.4	63	119	8.9
	2600	69	119	9.5	64	117	9.0	60	115	8.5
	2500	62	113	8.7	57	111	8.2	54	109	7.8
	2400	55	106	7.9	51	104	7.5	49	102	7.1
	2300	49	100	7.2	46	97	6.8	44	95	6.5
12,000	2650	69	121	9.5	64	119	8.9	60	117	8.5
	2600	65	118	9.1	61	116	8.5	57	114	8.1
	2500	58	111	8.3	54	109	7.8	51	107	7.4
	2400	52	105	7.5	49	102	7.1	46	100	6.8
	2300	47	98	6.9	44	95	6.6	41	92	6.3

Figure 5-8. Cruise Performance (Sheet 2 of 2)

RANGE PROFILE
45 MINUTES RESERVE
53 GALLONS USABLE FUEL

CONDITIONS:
2550 Pounds
Recommended Lean Mixture for Cruise At All Altitudes
Standard Temperature
Zero Wind

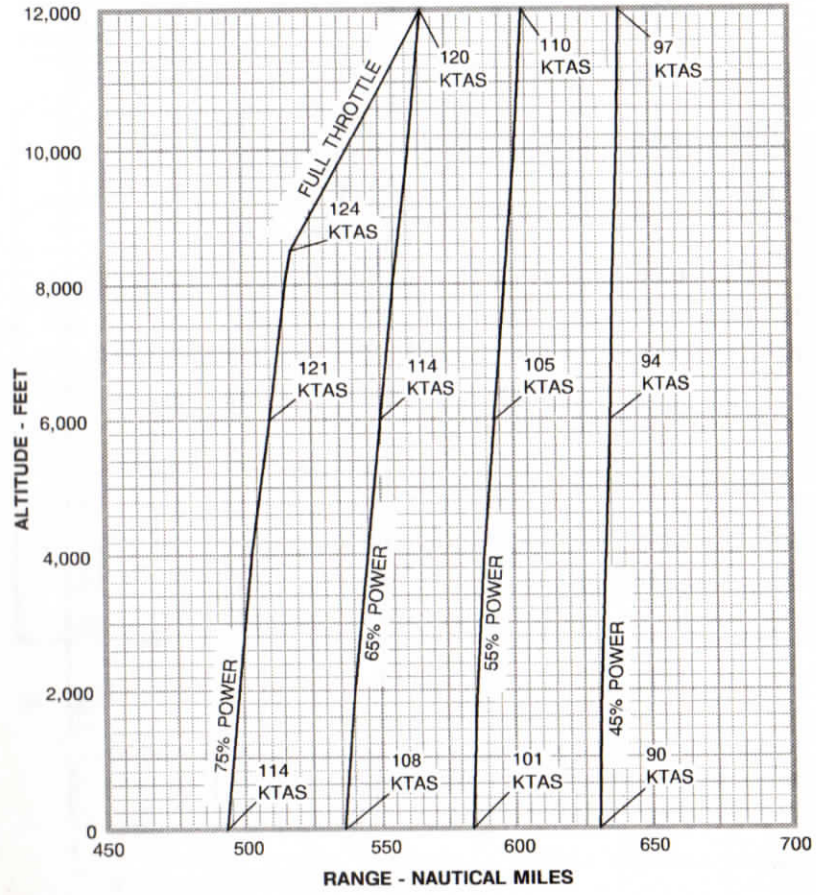

NOTES:
1. This chart allows for the fuel used for engine start, taxi, takeoff and climb, and the distance during climb.

Figure 5-9. Range Profile

ENDURANCE PROFILE
45 MINUTES RESERVE
53 GALLONS USABLE FUEL

CONDITIONS:
2550 Pounds
Recommended Lean Mixture for Cruise At All Altitudes
Standard Temperature

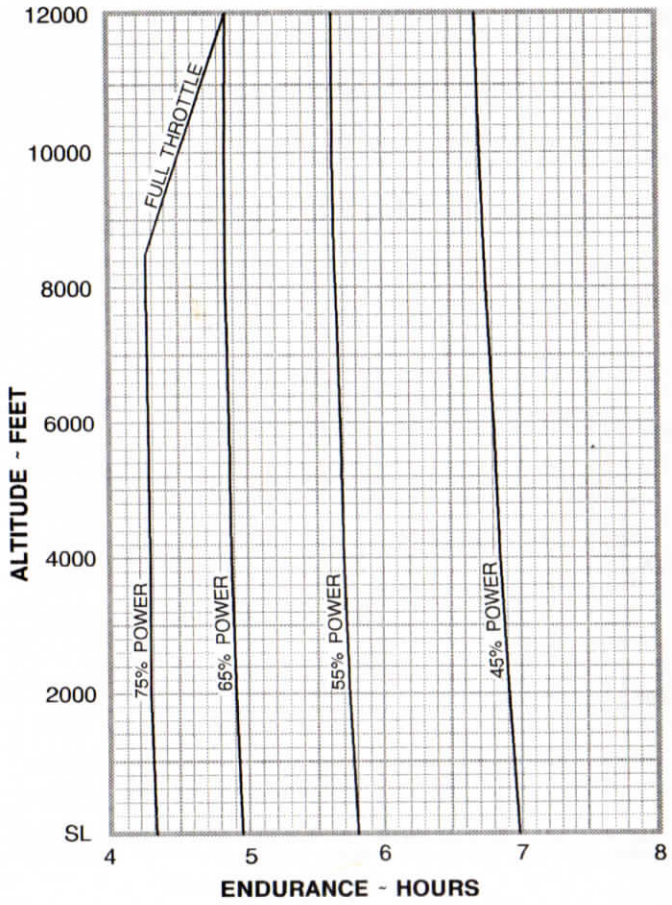

NOTE:
1. This chart allows for the fuel used for engine start, taxi, takeoff and climb, and the time during climb.

Figure 5-10. Endurance Profile

SHORT FIELD LANDING DISTANCE AT 2550 POUNDS

CONDITIONS:

Flaps 30°
Power Off
Maximum Braking
Paved, level, dry runway
Zero Wind
Speed at 50 Ft: 61 KIAS

Press Alt In Feet	0°C		10°C		20°C		30°C		40°C	
	Grnd Roll Ft	Total Ft To Clear 50 Ft Obst	Grnd Roll Ft	Total Ft To Clear 50 Ft Obst	Grnd Roll Ft	Total Ft To Clear 50 Ft Obst	Grnd Roll Ft	Total Ft To Clear 50 Ft Obst	Grnd Roll Ft	Total Ft To Clear 50 Ft Obst
S. L.	545	1290	565	1320	585	1350	605	1380	625	1415
1000	565	1320	585	1350	605	1385	625	1420	650	1450
2000	585	1355	610	1385	630	1420	650	1455	670	1490
3000	610	1385	630	1425	655	1460	675	1495	695	1530
4000	630	1425	655	1460	675	1495	700	1535	725	1570
5000	655	1460	680	1500	705	1535	725	1575	750	1615
6000	680	1500	705	1540	730	1580	755	1620	780	1660
7000	705	1545	730	1585	760	1625	785	1665	810	1705
8000	735	1585	760	1630	790	1670	815	1715	840	1755

NOTES:

1. Short field technique as specified in Section 4.
2. Decrease distances 10% for each 9 knots headwind. For operation with tail winds up to 10 knots, increase distances by 10% for each 2 knots.
3. For operation on dry, grass runway, increase distances by 45% of the "ground roll" figure.
4. If landing with flaps up, increase the approach speed by 9 KIAS and allow for 35% longer distances.

Figure 5-11. Short Field Landing Distance

SECTION 6
WEIGHT & BALANCE/ EQUIPMENT LIST

TABLE OF CONTENTS

	Page
Introduction	6-3
Airplane Weighing Procedures	6-3
Weight And Balance	6-6
Baggage Tie-Down	6-8
Comprehensive Equipment List	6-17

INTRODUCTION

This section describes the procedure for establishing the basic empty weight and moment of the airplane. Sample forms are provided for reference. Procedures for calculating the weight and moment for various operations are also provided.

It should be noted that specific information regarding the weight, arm, moment and installed equipment for this airplane as delivered from the factory can only be found in the plastic envelope carried in the back of this handbook.

⚠ WARNING

IT IS THE RESPONSIBILITY OF THE PILOT TO ENSURE THE AIRPLANE IS LOADED PROPERLY. OPERATION OUTSIDE OF PRESCRIBED WEIGHT AND BALANCE LIMITATIONS COULD RESULT IN AN ACCIDENT AND SERIOUS OR FATAL INJURY.

AIRPLANE WEIGHING PROCEDURES

1. Preparation:
   a. Inflate tires to recommended operating pressures.
   b. Defuel airplane. Refer to the Maintenance Manual.
   c. Service engine oil as required to obtain a normal full indication (8 quarts on dipstick).
   d. Move sliding seats to the most forward position.
   e. Raise flaps to the fully retracted position.
   f. Place all control surfaces in neutral position.
   g. Remove all non-required items from airplane.
2. Leveling:
   a. Place scales under each wheel (minimum scale capacity, 500-pounds nose, 1000 pounds each main).
   b. Deflate the nose tire and/or lower or raise the nose strut to properly center the bubble in the level (Refer to Figure 6-1).

AIRPLANE WEIGHING FORM

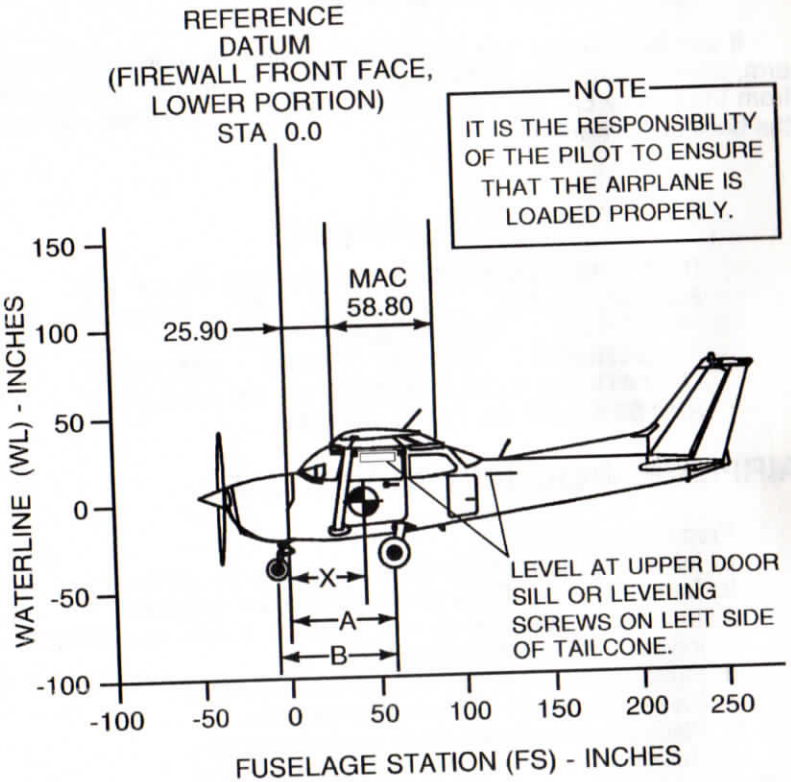

0585C1010

Figure 6-1. Airplane Weighing Form (Sheet 1 of 2)

LOCATING CG WITH AIRPLANE ON LANDING GEAR

FORMULA for Longitudinal CG:

$$(X) = (A) - \frac{\text{(NOSE GEAR NET WEIGHT) (\quad) X (B)}}{\text{NOSE AND MAIN LANDING GEAR WEIGHT TOTALED (\quad)}} = (\quad) \text{ INCHES AFT OF DATUM}$$

LOCATING PERCENT MAC

FORMULA for Percent MAC:

$$\text{CG Percent MAC} = \frac{\text{(CG Arm of Airplane) - 25.90}}{0.5880}$$

MEASURING A AND B

MEASURE A AND B PER PILOT'S OPERATING HANDBOOK INSTRUCTIONS TO ASSIST IN LOCATING CG WITH AIRPLANE WEIGHED ON LANDING GEAR.

LEVELING PROVISIONS

LONGITUDINAL - LEFT SIDE OF TAILCONE AT FS 108.00 & 142.00

AIRPLANE AS WEIGHED TABLE

POSITION	SCALE READING	SCALE DRIFT	TARE	NET WEIGHT
LEFT SIDE				
RIGHT SIDE				
NOSE				
AIRPLANE TOTAL AS WEIGHED				

BASIC EMPTY WEIGHT AND CENTER-OF-GRAVITY TABLE

ITEM	WEIGHT POUNDS	CG ARM (INCHES)	MOMENT (INCH-POUNDS /1000)
AIRPLANE (CALCULATED OR AS WEIGHED) (INCLUDES ALL UNDRAINABLE FLUIDS AND FULL OIL)			
DRAINABLE UNUSABLE FUEL AT 6.0 POUNDS PER GALLON - (3 GALLONS)	18.0	46.0	0.83
BASIC EMPTY WEIGHT			

Figure 6-1. Airplane Weighing Form (Sheet 2 of 2)

3. Weighing:
   a. Weigh airplane in a closed hangar to avoid errors caused by air currents.
   b. With the airplane level and brakes released, record the weight shown on each scale. Deduct the tare, if any, from each reading.
4. Measuring:
   a. Obtain measurement A by measuring horizontally (along the airplane centerline) from a line stretched between the main wheel centers to a plumb bob dropped from the firewall.
   b. Obtain measurement B by measuring horizontally and parallel to the airplane centerline, from center of nose wheel axle, left side, to a plumb bob dropped from the line between the main wheel centers. Repeat on right side and average the measurements.
5. Using weights from item 3 and measurements from item 4, the airplane weight and C.G. can be determined.
6. Basic Empty Weight may be determined by completing Figure 6-1.

WEIGHT AND BALANCE

The following information will enable you to operate your Cessna within the prescribed weight and center of gravity limitations. To calculate weight and balance, use the Sample Loading Problem, Loading Graph, and Center of Gravity Moment Envelope as follows:

Take the basic empty weight and moment from appropriate weight and balance records carried in your airplane, and enter them in the column titled YOUR AIRPLANE on the Sample Loading Problem.

NOTE

In addition to the basic empty weight and moment noted on these records, the C.G. arm (fuselage station) is also shown, but need not be used on the Sample Loading Problem. The moment which is shown must be divided by 1000 and this value used as the moment/1000 on the loading problem.

Use the Loading Graph to determine the moment/1000 for each additional item to be carried; then list these on the loading problem.

SAMPLE WEIGHT AND BALANCE RECORD

(CONTINUOUS HISTORY OF CHANGES IN STRUCTURE OR EQUIPMENT AFFECTING WEIGHT AND BALANCE)

AIRPLANE MODEL	SERIAL NO.	PAGE NUMBER

DATE	ITEM NO. IN	ITEM NO. OUT	DESCRIPTION OF ARTICLE OR MODIFICATION	WEIGHT CHANGE ADDED (+) WT. (LB.)	ADDED (+) ARM (IN.)	ADDED (+) MOMENT /1000	REMOVED (-) WT. (LB.)	REMOVED (-) ARM (IN.)	REMOVED (-) MOMENT /1000	RUNNING BASIC EMPTY WEIGHT WT. (LB.)	RUNNING BASIC EMPTY WEIGHT MOMENT /1000
			AS DELIVERED								

0585C1009

Figure 6-2. Sample Weight and Balance Record

NOTE

Loading Graph information for the pilot, passengers and baggage is based on seats positioned for average occupants and baggage loaded in the center of the baggage areas as shown on the Loading Arrangements diagram. For loadings which may differ from these, the Sample Loading Problem lists fuselage stations for these items to indicate their forward and aft C.G. range limitations (seat travel and baggage area limitation). Additional moment calculations, based on the actual weight and C.G. arm (fuselage station) of the item being loaded, must be made if the position of the load is different from that shown on the Loading Graph.

Total the weights and moments/1000 and plot these values on the Center of Gravity Moment Envelope to determine whether the point falls within the envelope, and if the loading is acceptable.

BAGGAGE TIE-DOWN

A nylon baggage net having tie-down straps is provided as standard equipment to secure baggage on the cabin floor aft of the rear seat (baggage area 1) and in the aft baggage area (baggage area 2). Six eyebolts serve as attaching points for the net. Two eyebolts for the forward tie-down straps are mounted on the cabin floor near each sidewall just forward of the baggage door approximately at station 90; two eyebolts are installed on the cabin floor slightly inboard of each sidewall approximately at station 107; and two eyebolts are located below the aft window near each sidewall approximately at station 107. A placard on the baggage door defines the weight limitations in the baggage areas.

When baggage area 1 is utilized for baggage only, the two forward floor mounted eyebolts and the two aft floor mounted eyebolts (or the two eyebolts below the aft window) may be used, depending on the height of the baggage. When baggage is carried in the baggage area 2 only, the aft floor mounted eyebolts and the eyebolts below the aft window should be used. When baggage is loaded in both areas, all six eyebolts should be utilized.

LOADING ARRANGEMENTS

* Pilot or passenger center of gravity on adjustable seats positioned for average occupant. Numbers in parentheses indicate forward and aft limits of occupant center of gravity range.

* * Arm measured to the center of the areas shown.

NOTES:
1. The usable fuel C.G. arm for integral tanks is located at station 48.0.
2. The rear cabin wall (approximate station 108) or aft baggage wall (approximate station 142) can be used as convenient interior reference points for determining the location of baggage area fuselage stations.

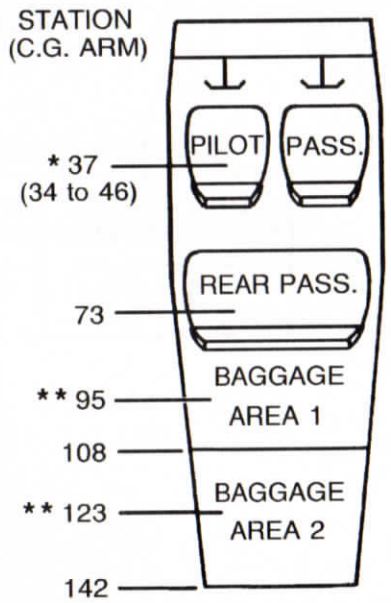

Figure 6-3. Loading Arrangements

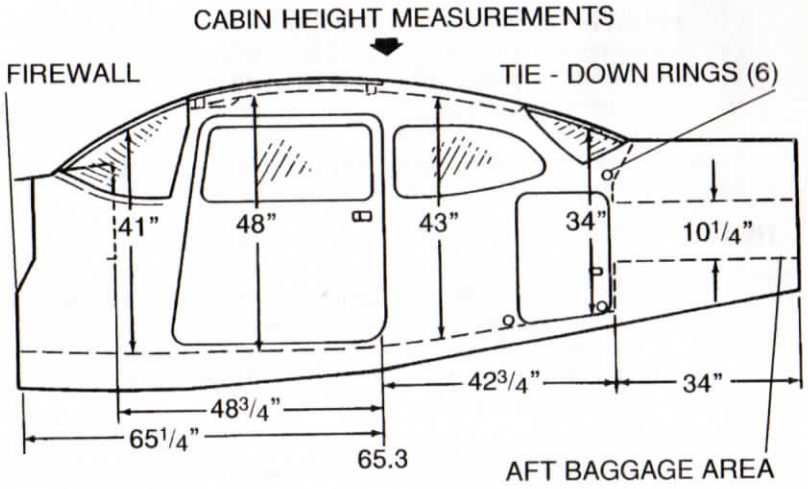

DOOR OPENING DIMENSIONS

	WIDTH (TOP)	WIDTH (BOTTOM)	HEIGHT (FRONT)	HEIGHT (REAR)
CABIN DOORS	32 1/2"	37"	40 1/2"	39"
BAGGAGE DOOR	15 1/4"	15 1/4"	22"	21"

0585X1023

Figure 6-4. Internal Cabin Dimensions (Sheet 1 of 2)

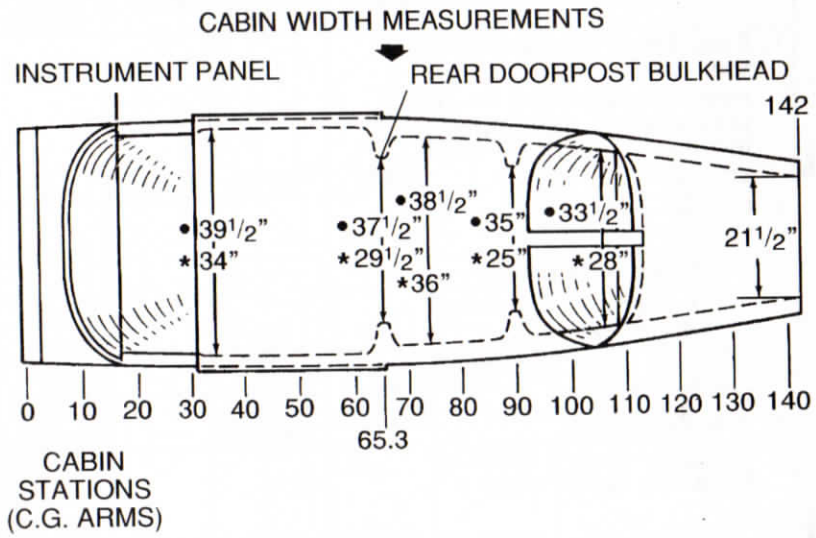

• LWR WINDOW LINE

* CABIN FLOOR

0585X1023

Figure 6-4. Internal Cabin Dimensions (Sheet 2 of 2)

DESCRIPTION	WEIGHT AND MOMENT TABULATION			
	SAMPLE AIRPLANE		YOUR AIRPLANE	
	Weight (lbs.)	Moment (Lb-ins. /1000)	Weight (lbs.)	Moment (Lb-ins. /1000)
1. Basic Empty Weight (Use the data pertaining to your airplane as it is presently equipped. Includes unusable fuel and full oil)	1642	62.6		
2. Usable Fuel (At 6 Lbs./Gal.)				
53 Gallons Maximum				
30 Gallons (Quantity used for example)	180	8.6		
3. Pilot and Front Passenger (Station 34 to 46)	340	12.6		
4. Rear Passengers	340	24.8		
5. *Baggage Area 1 (Station 82 to 108; 120 Lbs. Max.)	56	4.6		
6. *Baggage Area 2 (Station 108 to 142; 50 Lbs. Max.)				
7. **RAMP WEIGHT AND MOMENT** (add columns)	**2558**	**113.2**		
8. Fuel allowance for engine start, taxi and runup	-8.0	-0.4		
9. **TAKEOFF WEIGHT AND MOMENT** (Subtract Step 8 from Step 7)	**2550**	**112.8**		

10. Locate this point (2550 at 112.8) on the Center of Gravity Moment Envelope, and since this point falls within the envelope, the loading is acceptable.

* The maximum allowable combined weight capacity for baggage areas 1 and 2 is 120 pounds.

Figure 6-5. Sample Loading Problem (Sheet 1 of 2)

YOUR AIRPLANE		YOUR AIRPLANE		YOUR AIRPLANE	
Weight (lbs.)	Moment (Lb-ins. /1000)	Weight (lbs.)	Moment (Lb-ins. /1000)	Weight (lbs.)	Moment (Lb-ins. /1000)

NOTE

When several loading configurations are representative of your operations, it may be useful to fill out one or more of the above columns so specific loadings are available at a glance.

Figure 6-5. Sample Loading Problem (Sheet 2 of 2)

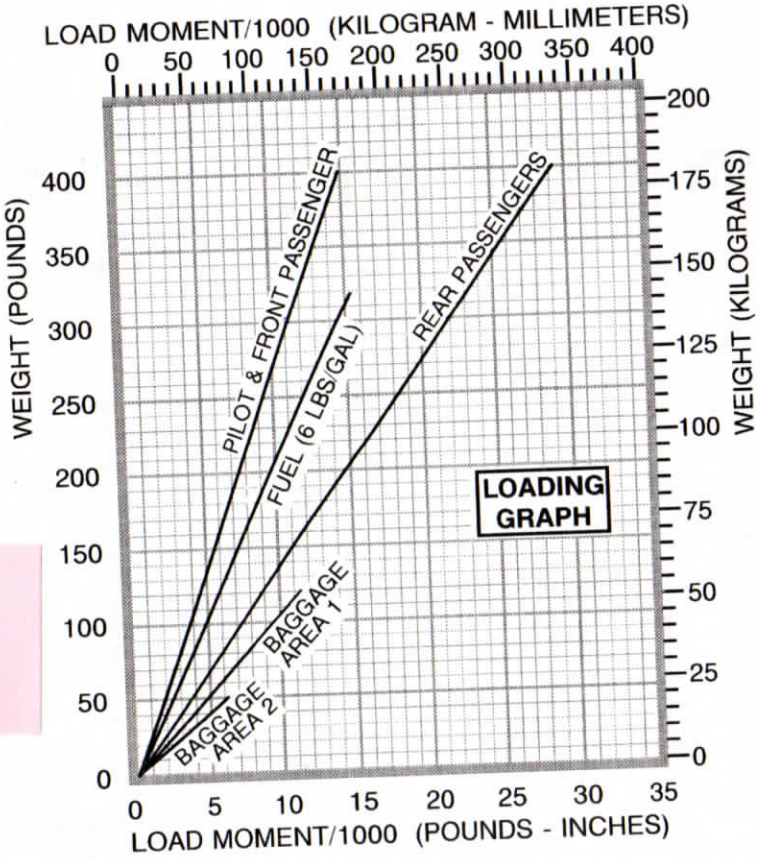

NOTE: LINE REPRESENTING ADJUSTABLE SEATS SHOWS THE PILOT OR PASSENGER CENTER OF GRAVITY ON ADJUSTABLE SEATS POSITIONED FOR AN AVERAGE OCCUPANT. REFER TO THE LOADING ARRANGEMENTS DIAGRAM FOR FORWARD AND AFT LIMITS OF OCCUPANT C.G. RANGE.

0585C1006

Figure 6-6. Loading Graph

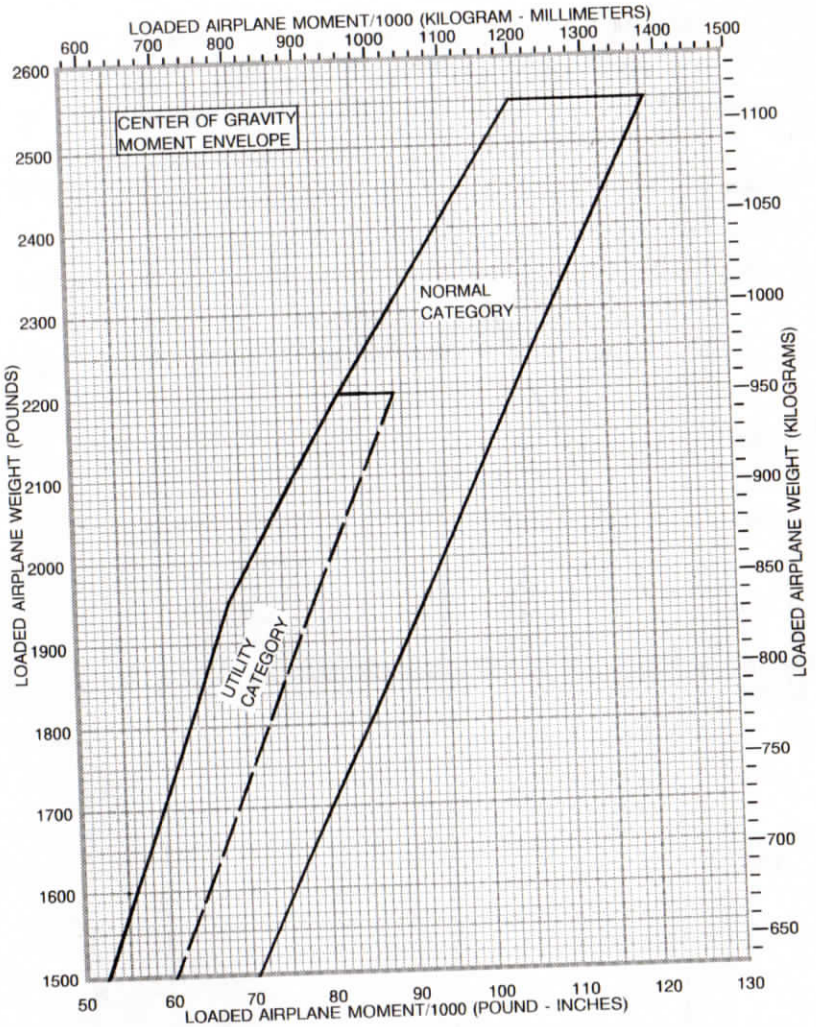

0585C1007

Figure 6-7. Center of Gravity Moment Envelope

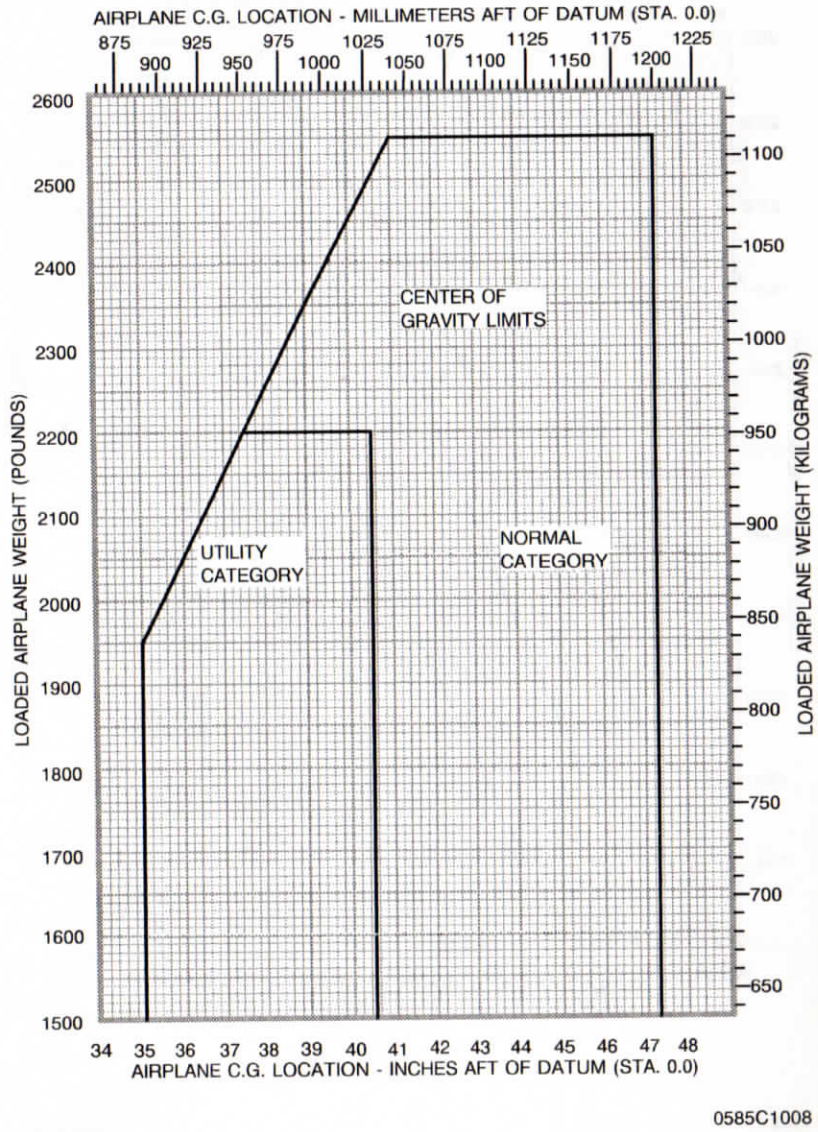

Figure 6-8. Center of Gravity Limits

N21180

WEIGHT AND BALANCE REVISION

MANUFACTURE	MODEL	SERIAL NUMBER	PART NUMBER	WT.	ARM	MOM
EI	CGR-30P	154629		4.50	14.50	65.25
			TOTAL	4.50		65.25

REMOVED EQUIPMENT

MANUFACTURE	MODEL	SERIAL NUMBER	PART NUMBER	WT.	ARM	MOM
CESSNA	FUEL			0.40	16.50	6.60
CESSNA	OIL			0.40	16.50	6.60
			TOTAL	0.80		13.20
			TOTAL ADDED	3.70		52.05

NEW WEIGHT	1676.47	OLD WEIGHT	1672.77
NEW C.G.	42.43	OLD C.G.	42.49
NEW U.L.	881.53	OLD U.L.	885.23
NEW MON.	71130.52	OLD MON.	71078.47

JPS AVIATION, LLC. MONROE, LA. 3MID878B
WORK ORDER NUMBER 57772

Aircraft Weight and Balance Revision

Tail Number: **N21180**	Date: 9-28-2020
Prepared by: Total Aircraft Services	Work Order No:
	Type Certificate Data No: 3A12

Aircraft Make:	Model:	Serial No:	Time:
Cessna	C172S	172S9624	4168.4

Registered Owner:	Address:
Priority Aviation	2925 Gulf Fwy S STE#336 League City, TX 77573-6769

Maximum Weight **2558**	CG Range FWD	AFT

As Received; Date of Previous Weight and Balance:	**Useful Load:**	**EW:**	**EWCG:**	**Moment:**
7/24/2014	881.53	1676.47	42.43	71132.62

Notes:

	Weight	**Arm**	**Moment**
Installed Rear Seat	44.7	79.5	3553.65
			0.00
			0.00
			0.00
	0.00	0.00	0.00
	0.00	0.00	0.00
	0.00	0.00	0.00
	0.00	0.00	0.00
	0.00	0.00	0.00
	0.00	0.00	0.00

		New Empty Weight CG	**New Useful Load**
☒ As Calculated	Moment 74686.27	**43.39**	**836.83**
☐ As Weighed	Weight 1721.17		

Signature

Repair Agency or License No: IA 3525486

N21180
07/24/2014

Installed Electronics International System CGR-30P s/n 154629 I/A/W STC SA02283SE and Unit is listed on Aircraft Master List

EMPTY WEIGHT	1676.47
C.G	42.43
U.L.	881.53
MOMENT	1130.52

The aircraft and/or component identified above was inspected in with current regulations of the Federal Aviation Agency and found airworthy for return to service.

JPS Aviation, LLC 5410 Operations Road Monroe, LA. 71203
Repair Station # 3MID878B
Leonard Farrar 3617577 Work Order # 57772

HEATH AVIATION
219 AIRPORT DRIVE
WINONA, MS 38967

DATE: 3/29/2014

AIRCRAFT GROSS WEIGHT: 2558 PREVIOUS EMPTY WEIGHT: 1,674.60 PREVIOUS USEFUL LOAD: 883.40
PREVIOUS AIRCRAFT CG: 42.14 PREVIOUS MOMENT; 70567.64

AIRCRAFT REGISTRATION: N21180
AIRCRAFT MAKE: CESSNA MODEL: C172S SERIAL # 172S9624

REVISED WEIGHT & BALANCE

ITEM	WEIGHT	ARM	MOMENT
AIRCRAFT EMPTY WEIGHT	1,674.60	42.14	70,567.64
REMOVED			
KX155A	-4.00	12.50	-50.00
KMD540	-4.00	12.50	-50.00
KLN94	-3.30	12.40	-40.92
OLD WIRING	-8.00	10.00	-80.00
	0.00		0.00
	0.00		0.00
	0.00		0.00
	0.00		0.00
	0.00		0.00
	0.00		0.00
	0.00		0.00
	0.00		0.00
	0.00		0.00
	0.00		0.00
	0.00		0.00
	0.00		0.00
TOTAL FROM REMOVALS:	-19.30		-220.92
INSTALLED			
	0.00		0.00
GTN750	9.30	12.50	116.25
GA35	0.50	50.00	25.00
GDL88	3.67	150.00	550.50
NEW WIRING	4.00	10.00	40.00
	0.00		0.00
	0.00		0.00
	0.00		0.00
	0.00		0.00
	0.00		0.00
	0.00		0.00
	0.00		0.00
	0.00		0.00
	0.00		0.00
	0.00		0.00
	0.00		0.00
TOTAL FROM INSTALLS	17.47		731.75

NEW EMPTY WEIGHT: 1,672.77
NEW EMPTY WEIGHT CG: 42.49
NEW USEFUL LOAD: 885.23
NEW MOMENT: 71,078.47

AUTHORIZING SIGNATURE: Joshua D Heath
CERTIFICATE NO: HVDR337X
TYPE: REPAIR STATION

Aircraft Weight and Balance Revision

Tail Number: 21180 Date: 10/4/13
Prepared By: Buddy Bowering

Aircraft make: Cessna Model: 172S Serial No: 172S9624
Registered Owner: Dove Aviation, LLC Address: 4440 Sandridge Dr.
Jackson, MS 39211

Maximum Weight: 2558
As Received: Date of Previous Weight and Balance: 6/[illegible]/11

Useful Load:	EW:	EWGG:	Moment:
838.70	1719.30	41.08	70630.16

	Weight	Arm	Moment
Removed Rear Seat	-44.7 lbs	+79.5	3553.65
Installed Nose Pant	+3.5 lbs	+3.5	12.25
Installed Main Wheel Pants	+10.1 lbs	+61.1	617.11
Installed Brake Fairings	+1.1 lbs	+55.6	61.16

ACEW 1674.6

New Empty Weight CG 42.14

New Useful Load 883.4

Buddy Bowering

y or License No: A&P 1707558

TOW = Take off WT
MTOW = MAX TO WT
LDW = Landing WT
ZFW = Zero Fuel WT.

Aircraft Weight and Balance Revision

Tail Number: **21180**			Date: 6-15-11
Prepared by: BUDDYS AIRCRAFT SERVICE INC 4120A AIRPORT ROAD BOLTON MS 39041			Work Order No: Type Certificate Data No:
Aircraft Make: CESSNA	Model: 172S	Serial No: 172S9624	Time:
Registered Owner: DOVE AVIATION,LLC		Address: 4140 SANDRIDGE DRIVE JACKSON MS 39211	
Maximum Weight **2558**		CG Range FWD	AFT

As Received; Date of Previous Weight and Balance:	Useful Load:	EW:	EWCG:	Moment:
2-4-09	838.70	1719.30	41.08	70630.16

Notes:

	Weight	Arm	Moment
REMOVED NOSE WHEEL PANT	-3.5	-3.5	12.25
REMOVED MAIN WHEEL PANTS (2 EA.)	-10.1	+61.1	-617.11
REMOVED BRAKE FAIRINGS (2 EA.)	-1.1	+55.6	-61.16
	0.00	0.00	0.00
	0.00	0.00	0.00
	0.00	0.00	0.00
	0.00	0.00	0.00
	0.00	0.00	0.00
	0.00	0.00	0.00
	0.00	0.00	0.00

Superceded 10/4/12

☒ As Calculated ☐ As Weighed	Moment 69964.14 Weight 1704.60	**New Empty Weight CG** **41.04**	**New Useful Load** **853.40**

Signature M.H. Bow

Repair Agency or License No: A+P 1707558 IA.

EQUIPMENT CHANGE - WEIGHT & BALANCE			
REG. NO.	MODEL		Serial No.
N21180	Cessna	172SP	172S9624
Items: (Description / P/N / S/N)	Weight Pounds	Arm Inches	Moments Inch/Pounds
Previous Aircraft Empty Weight:	1718.2	41.072	70569
Removed main wheel and brake fairings.	-10.1	61.1	-617.11
Removed nose wheel fairing	-3.5	-3.5	12.25
			0
			0
			0
			0
			0
			0
			0
			0
			0
			0
			0
			0
			0
Totals	1704.6		69964.14

Superseded 2-4-09

A. Old Empty Weight	1718.2	Pounds
B. Old Empty CG	41.072	Inches
C. Old Empty Weight CG Moment	70569	Inch/Pounds
D. Max Gross Weight	2558	Pounds
E. Old Useful Load	839.8	Pounds

A. New Empty Weight	1704.6	Pounds
B. New Empty CG	41.04432	Inches
C. New Empty Weight CG Moment	69964.14	Inch/Pounds
D. Max Gross Weight	2558	Pounds
E. New Useful Load	853.4	Pounds

This new weight & balance information superseads all previous weight and balance data.
For aircraft loading, see instructions in Weight & Balance Section of Aircraft Flight Manual.

FAA Form 337 Completed?	Y	N
Equipment List Amended?	Y	N

By: Curt Lee Power — Date: 5/28/2004

A&P528770866

Work Order Number 172S9624 Aircraft Serial# 172S9624
Aircraft Type 172 Cessna 172
Package Option SEP172MD-18 04 172 nav 2 w/mfd #18

DELIVERY SET S Servos

Unit Number	Part Number	Description	Qty	Serial Number
KC 0140	065-00176-7904	FLT CMPTR-2 AX W/ALTPRE/MSG RS	1	7444
KCM0100	071-00073-5000	CONFIGURATION MODULE	1	11945
KI 0208	066-03056-0002	VOR/LOC IND W/ANTI REFLECT	1	73675
KI 0209A	066-03056-0011	VOR/LOC/GS IND W/GPS DISPLAY	1	9301
KLN0094	069-01034-0102	KLN94 COLOR GPS ROLL STEERING	1	20852
KLN0094	071-00163-0103	KLN94 AMERICAS DATABASE CARD	1	N/A
KM 0275	065-00030-0000	SERVO MOUNT	1	58483
KM 0275	065-00030-0000	SERVO MOUNT	1	58495
KM 0275	065-00030-0002	SERVO MOUNT	1	58389
KMA0028	066-01176-0101	AUDIO MKR/INTERCOM/STERO/SPLIT	1	A03721
KMD0540	066-04035-0301	MULTI-FUNCT DISPLAY SC	1	5764
KMD0540	071-00161-0101	AMERICAS DATABASE CARD	1	N/A
KS 0270C	065-00178-2200	PITCH SERVO, DUAL SG-2.40 RPM	1	6922
KS 0271C	065-00179-0300	PRIMARY SERVO-1.2RPM	1	8983
KS 0272C	065-00180-0400	TRIM SERVO - 2.40 RPM	1	6454
KT 0076C	066-01156-0101	XPDR ATCRBS DIGITAL SC PLUS	1	16994
KX 0155A	069-01032-0101	NAV/COM 25KHZ 28V GS	1	26646
KX 0155A	069-01032-0201	NAV/COM 25KHZ 28V (NO G/S)	1	26749

Airplane Order

OPERATIONS **CHANGE 1** Cessna

INVOICE TO	SHIP TO	CONTROL NO.
Single Engine Mkt.	Domestic	172S9624 319624
CUSTOMER ORDER NO.	**MODEL**	**DATE**
	Skyhawk SP	12-16-03
		LOCK NO.
		ENGINE NUMBER FORE/L.H.
		AFT/R.H.
SERIAL NO.	**REGISTRATION**	**PROPELLER NUMBER** FORE/L.H.
172S9624	~~W/A~~ ~~TEMP~~ 01 03-09-04 N21180 01	AFT/R.H.

INSTALL EQUIPMENT AS FOLLOWS

ITEM	F.K. NUMBER	DESCRIPTION	CHANGE NO.	CHANGE TYPE	CHANGE DATE
		EXTERIOR			
1	516C	Exterior Option 1 Red/Blue			
		OPTIONAL EQUIPMENT			
2	601G	Nav II Avionics w/ MFD			
3	015C	Wheel Fairings			

PAINT	UPHOLSTERY AND TRIM	CLEAN UP

~~PRODUCTION DATE~~	~~DELIVERY DATE~~
	Per Prod Schedule

WEIGHT & BALANCE AND INSTALLED EQUIPMENT DATA

CESSNA AIRCRAFT COMPANY

SINGLE ENGINE DIVISION

Cessna
A Textron Company

MODEL	SERIAL & REGISTRATION		WEIGHT	ARM	MOMENT
172S	172S9624	N21180	(lbs)	(in)	(lb-in)
(calculated)	STANDARD EMPTY WEIGHT		1,663.2	40.719	67,724
INSTALLED EQUIPMENT			*Net Change from Standard Aircraft*		
ALTIMETER WITH 20 FT MARKING, DUAL WINDOW, 20000 FT			0.0	0.000	0
BAGGAGE NET			0.0	0.000	0
BASIC AVIONICS ITEMS, USED W/1ST NAV/COM			0.0	0.000	0
C/B PNL EXCHANGE			0.2	16.500	3
DIRECTIONAL GYRO EXCHANGE			0.5	14.000	7
DUAL AXIS AUTOPILOT			19.7	91.200	1,797
DUAL PUMP, ENGINE DRIVEN VACUUM SYSTEM			0.0	0.000	0
EMERGENCY LOCATOR TRANSMITTER INSTL			0.0	0.000	0
ENGINE, LYCOMING IO-360-L2A			0.0	0.000	0
FUEL SAMPLING CUP			0.0	0.000	0
GYRO INSTALLATION			0.0	0.000	0
KLN 94 GPS INSTALLATION			4.8	15.000	72
KMA 28 AUDIO/INTERCOM/MARKER BEACON INSTL			0.0	0.000	0
KT 76C MODE C TRANSPONDER INSTL			0.0	0.000	0
KX 155A #2 NAV/COM INSTALLATION W/G.S.			6.8	17.300	118
KX 155A NAV/COM #1 INSTALLATION - NO G.S			0.0	0.000	0
MD41-231 GPS/NAV SELECTOR			0.2	16.500	3
MULTI-FUNCTION DISPLAY INSTALLATION			6.1	13.100	80
PILOT CONTROL WHEEL EXCHANGE			0.2	26.000	5
PILOT'S CHECKLIST			0.0	0.000	0
POH AND FAA APPROVED AIRPLANE FLIGHT MANUAL			0.0	0.000	0
PROPELLER ASSY, MCCAULEY, FIXED PITCH, 1A170E/JHA7660			0.0	0.000	0
TOW BAR, NOSE GEAR (STOWED)			0.0	0.000	0
VINYL/LEATHER SEATS SHORTAGE			0.0	0.000	0
WHEEL FAIRING INSTALLATION			16.5	46.100	761

SUPERCEDES 05/28/04

The weight and balance data shown in this report are computed on the basis of Federal Aviation Administration approved procedures for establishing fleet weight averages. [Far 21.327(f)(2)]

Weighed: 3/10/2004
Printed: 4/5/2004

This list contains all installed optional equipment and avionics. All weights and arms are the installed difference from a standard equipped aircraft. For a detailed list of aircraft equipment weight and balance data, please refer to the comprehensive equipment list in the pilots operating handbook.

BASIC EMPTY WEIGHT	1,718.2	41.072	70,569
USEFUL LOAD	839.8		
MAXIMUM RAMP WEIGHT	2,558.0		
MAXIMUM TAKE-OFF WEIGHT	2,550.0		

Revised 26 Feb. 2001

Numerical values shown may be rounded from actual values. Therefore, the product of weight times arm may not equal the listed moment.

COMPREHENSIVE EQUIPMENT LIST

The following figure (Figure 6-9) is a comprehensive list of all Cessna equipment which is available for the Model 172S airplane. This comprehensive equipment list provides the following information in column form:

In the **ITEM NO** column, each item is assigned a coded number. The first two digits of the code represent the assignment of the item within the Air Transport Association Specification 100 breakdown (11 for Paint and Placards, 24 for Electrical Power, 77 for Engine Indicating, etc...). These assignments also correspond to the Maintenance Manual chapter breakdown for the airplane. After the first two digits (and hyphen), items receive a unique sequence number (01, 02, 03, etc...). After the sequence number (and hyphen), a suffix letter is assigned to identify equipment as a required item, a standard item or an optional item. Suffix letters are as follows:

- -R = required items or equipment for FAA certification
- -S = standard equipment items
- -O = optional equipment items replacing required or standard items
- -A = optional equipment items which are in addition to required or standard items

In the **EQUIPMENT LIST DESCRIPTION** column, each item is assigned a descriptive name to help identify its function.

In the **REF DRAWING** column, a Cessna drawing number is provided which corresponds to the item.

NOTE

If additional equipment is to be installed, it must be done in accordance with the reference drawing, service bulletin or a separate FAA approval.

In the **WT LBS** and **ARM INS** columns, information is provided on the weight (in pounds) and arm (in inches) of the equipment item.

NOTES

Unless otherwise indicated, true values (not net change values) for the weight and arm are shown. Positive arms are distances aft of the airplane datum; negative arms are distances forward of the datum.

Asterisks (*) in the weight and arm column indicate complete assembly installations. Some major components of the assembly are listed on the lines immediately following. The sum of these major components does not necessarily equal the complete assembly installation.

ITEM NO	EQUIPMENT LIST DESCRIPTION	REF DRAWING	WT LBS	ARM INS.
	11 - PLACARDS AND MARKINGS			
11-01-R	PLACARD, OPERATIONAL LIMITATIONS	0505087-23	0.0	43.0
11-02-S	PAINT, OVERALL EXTERIOR	0504051	19.2*	95.4*
	- OVERALL WHITE	870-003	18.4	93.6
	- COLORED STRIPE DECALS	119916	0.8	135.9
	21 - AIR CONDITIONING			
21-01-S	REAR SEAT VENTS	0513575-28	1.7	60.0
21-02-S	CABIN HEATER SYSTEM (EXHAUST SHROUD ASSY, HEATER & HOSES)	9954100-1	2.5	-4.0
	22 - AUTO FLIGHT			
22-01-S	WING LEVELER PROVISIONS	3900003	2.2*	23.0*
	- CABLE ASSEMBLY	3924109-1	1.6	14.8
	- WING CABLE ASSEMBLY	3924110-1	0.6	45.0
22-02-A	SINGLE AXIS AUTOPILOT	3900004	7.2*	43.6*
	- AUTOPILOT COMPUTER/CONTROLLER	065-00176-2501	3.1	12.1
	- ROLL ACTUATOR, WITH MOUNT	3940400-1	3.6	68.5
	- CONFIGURATION MODULE	071-00073-5000	0.1	9.0
22-03-A	TWO AXIS AUTOPILOT	3900021	19.7*	104.4*
	- AUTOPILOT COMPUTER/CONTROLLER	065-00176-5201	3.1	12.1
	- ROLL ACTUATOR WITH MOUNT	3940400-1	3.6	68.5
	- PITCH ACTUATOR, WITH MOUNT	0501145-1	4.5	173.8
	- MISC STRUCTURE, WIRE & HARDWARE	3924126-1	3.0	60.0
	- PITCH TRIM OPTION, REQUIRES 22-03A	3900021-1	4.1*	139.8*
	- PITCH TRIM ACTUATOR	0501153-1	2.1	174.5
	- PITCH TRIM ELECTRICAL WIRING		1.6	87.8
	- ACCESS PANEL		1.4	170.0
	- MISCELLANEOUS STRUCTURE, WIRE & HARDWARE		3.0	60.0
22-04-A	ALTITUDE ALERT CONTROLLER REPLACES STANDARD 2-AXIS AUTOPILOT CONTROLLER & REQUIRES GPS ALT ALERT BE DISABLED - WT CHG	3910299	0.0	- - -
	23 - COMMUNICATIONS			
23-01-S	STATIC DISCHARGE WICKS (SET OF 10)	0501048-1	0.4	143.2
23-02-S	NAV/COM #1 INSTALLATION - NO G.S.	3930407-1	7.9*	52.7*
	- KX 155A BENDIX/KING NAV/COM	069-01032-0102	3.5	12.5
	- KI 208 INDICATOR	066-03056-0002	1.0	13.9
	- VHF COM ANTENNA		0.5	61.2
	- COM ANTENNA CABLE		0.4	26.5
	- OMNI NAV ANTENNA		0.5	253.4
	- OMNI ANTENNA CABLE		1.5	123.8
	- HARDWARE & CABLE ASSEMBLY	3921100-1	0.5*	9.7*

Figure 6-9. Equipment List Description (Sheet 1 of 8)

ITEM NO	EQUIPMENT LIST DESCRIPTION	REF DRAWING	WT LBS	ARM INS.
23-03-A	NAV/COM #2 INSTALLATION - WITH G.S.		6.5*	17.1*
	- KX 155A NAV/COM WITH GLIDESLOPE	069-01032-0101	4.0	12.5
	- KI 209A INDICATOR WITH GLIDESLOPE	066-03056-0003	1.2	13.9
	- NAV ANTENNA WITH G.S. COUPLER		0.2	14.0
	- CO-AX COM ANTENNA		0.5	61.2
	- HARDWARE & CABLE ASSEMBLY	3921101-1	0.2	3.5
23-04-A	AUDIO/INTECOM/MARKER BEACON INSTL	3930407-1	2.5*	19.7*
	- KMA-26 AUDIO/RECEIVER PANEL	066-01155-0201	1.7	14.8
	- HARDWARE & CABLE ASSEMBLY	3900003-2	0.8	30.0
23-05-S	BASIC AVIONICS EQUIP/LESS BLACK BOXES		11.3*	27.4*
	- MARKER BEACON ANTENNA INSTL	3960188-1	0.5	131.0
	- FUSELAGE AND AUDIO WIRING	3921114-1	7.9	26.5
	- MICROPHONE INSTL, HAND HELD	3970124-9	0.2	18.0
	- AVN COOLING FAN INSTL	3930400-1	1.2	5.9
	- BASIC CIRCUIT BREAKER PANEL	3930417-2	0.4	16.5
	- AVN GROUND INSTL	3940357-1	0.2	15.0
	- MISCELLANEOUS HARDWARE		0.9	16.0
	24 - ELECTRICAL POWER			
24-01-R	ALTERNATOR, 28 VOLT 60 AMP	9910591-11	10.0	-29.0
24-02-R	BATTERY, 24 VOLT, 12.75 A.H. MANIFOLD TYPE	C614002-0101	23.2	-5.0
24-03-R	POWER JUNCTION BOX (PRECISION AIRMOTIVE CORP. MC01-2A) INCLUDES:	MC01-2A	6.4*	2.5*
	- ALTERNATOR CONTROL UNIT-AC2101	1270101-1	0.2	3.0
	- MASTER CONTACTOR P/N X61-0007	1270101-1	0.7	2.4
	- STARTER CONTACTOR P/N X61-0012	3930400-1	0.7	2.4
	- AMMETER TRANSDUCER P/N CS3100	3930417-2	0.1	3.0
	25 - EQUIPMENT/FURNISHINGS			
25-01-R	PILOT SEAT, CLOTH COVER	0514211-1	34.3	41.5
25-02-O	PILOT SEAT, LEATHER COVER	0514211-5	35.0	41.5
25-03-O	PILOT SEAT, LEATHER/VINYL COVER	0514211-8	34.8	41.5
25-04-O	PILOT SEAT, MILLENNIUM COVER	0514211-11		41.5
25-05-S	COPILOT SEAT, CLOTH COVER	0512211-1	34.3	41.5
25-06-O	COPILOT SEAT, LEATHER COVER	0514211-5	35.0	41.5
25-07-O	COPILOT SEAT, LEATHER/VINYL COVER	0512211-8	34.8	41.5
25-08-O	COPILOT SEAT, MILLENNIUM COVER	0512211-11		41.5
25-09-S	REAR SEAT, CLOTH COVER	0514219-1	43.3	79.5
25-10-O	REAR SEAT, LEATHER COVER	0514219-2	44.7	79.5
25-11-O	REAR SEAT, LEATHER/VINYL COVER	0514219-3	44.3	79.5
25-12-O	REAR SEAT, MILLENNIUM COVER	0514219-4		79.5
25-13-R	CREW RESTRAINT SYSTEM, INERTIA REEL	2000031-9,-10	5.2	54.0
25-14-O	CREW RESTRAINT SYSTEM, MANUAL ADJUST	2000031-9,-10	4.0	54.0

Figure 6-9. Equipment List Description (Sheet 2 of 8)

ITEM NO	EQUIPMENT LIST DESCRIPTION	REF DRAWING	WT LBS	ARM INS.
25-15-S	REAR SEAT RESTRAINT SYSTEM, INERTIA REEL	2000031-11,-12	5.2	90.0
25-16-O	REAR SEAT RESTRAINT SYSTEM, MANUAL ADJUST	2000031-11,-12	4.0	90.0
25-17-S	PADDED GLARESHIELD	0514230-1	1.2	21.0
25-18-S	SUN VISORS	0514166-2	1.1	32.8
25-19-S	SUN VISOR INSTL - MILLENNIUM	0519004-1		
25-20-S	BAGGAGE RESTRAINT NET	2015009-7	0.5	95.0
25-21-S	CARGO TIE DOWN RINGS	0515055-6	0.2	95.0
25-22-S	PILOT'S OPERATING CHECKLIST (STOWED IN MAP CASE)	0500835-1	0.3	14.3
25-23-R	PILOT'S OPERATING HANDBOOK AND FAA APPROVED AIRPLANE FLIGHT MANUAL (STOWED IN PILOT'S SEAT BACK CASE)	0500835-1	1.2	50.0
25-24-S	FUEL SAMPLING CUP (STOWED)	S2107-1	0.1	14.3
25-25-S	TOW BAR, NOSE GEAR (STOWED)	0501019-1	1.7	124.0
25-26-R	EMERGENCY LOCATOR TRANSMITTER	3940401-1	3.2*	101.0*
	- ELT TRANSMITTER	3000-11	1.8	113.3
	- ANTENNA AND CABLE ASSY	3003-45	0.5	122.0
	26 - FIRE PROTECTION			
26-01-S	FIRE EXTINGUISHER INSTALLATION	0501011-2	5.3*	43.8*
	- FIRE EXTINGUISHER	C421001-0201	4.8	44.0
	- MOUNTING CLAMP	1290010-1	0.5	42.2
	27 - FLIGHT CONTROLS			
27-01-S	RIGHT SEAT CONTROLS	0506009-1	6.1*	13.7*
	- COPILOT CONTROL WHEEL	0513576-4	2.6	26.0
	- COPILOT RUDDER & BRAKE PEDAL INSTL,	0510402-16	1.1	6.8
27-02-S	PILOTS CONTROL WHEEL WITH MAP LIGHT, MIC SWITCH AND JACK	0513576-5	0.2	22.0
	28 - FUEL			
28-01-R	FUEL QUANTITY INDICATORS	S3281-2	0.4	16.5
28-02-R	AUXILIARY FUEL PUMP (UNDER FLOORBOARD)	5100-00-1	1.9	9.5
	31 - INDICATING/RECORDING SYSTEM			
31-01-S	DIGITAL ELECTRONIC CLOCK/OAT	M803B-2-0/28V-B	0.7	16.5
31-02-S	HOUR RECORDER "HOBBS TIME"	C664503-0103	0.5	9.1
31-03-R	ANNUNCIATOR	CSEWCA-01	0.5	16.0
31-04-R	PNEUMATIC STALL WARNING SYSTEM	0523112-2	0.4	28.5

Figure 6-9. Equipment List Description (Sheet 3 of 8)

ITEM NO	EQUIPMENT LIST DESCRIPTION	REF DRAWING	WT LBS	ARM INS.
	32 - LANDING GEAR			
32-01-R	WHEEL BRAKE AND TIRE, 6.00 X 6 MAIN	0541200-9,-10	34.4*	57.8*
	- WHEEL ASSY, CLEVELAND (EACH)	C163001-0104	6.2	58.2
	- BRAKE ASSY, CLEVELAND (EACH)	C163030-1111	1.8	54.5
	- TIRE, 6-PLY, 6.00 X 6 BLACKWALL	C262003-0204	7.9	58.2
	- TUBE (EACH)	C262023-0102	1.3	58.2
32-02-R	WHEEL AND TIRE, 5.00 X 5 NOSE	0543062-17	9.5*	-6.8*
	- WHEEL ASSY, CLEVELAND	1241156-12	3.5	-6.8
	- TIRE, 6-PLY, 5.00 X 5 BLACKWALL	C262003-0202	4.6	-6.8
	- TUBE	C262023-0101	1.4	-6.8
32-03-A	WHEEL FAIRINGS AND INSTALLATION	0541225-1	16.5*	46.1*
	- NOSE WHEEL FAIRING	0543079-3	3.5	-3.5
	- MAIN WHEEL FAIRINGS (SET OF 2)	0541223-16, -17	10.1	61.1
	- BRAKE FAIRINGS (SET OF 2)	0541224-1, -2	1.1	55.6
	- MOUNTING PLATE (SET OF 2)	0541220-1,-2	0.8	59.5
32-04-O	PREMIUM TIRES, 6.00 X 6, 160 MPH RATING, EXCHANGE WITH STANDARD TIRES (NET CHANGE)	0501166-1	4.1	47.1
	33 - LIGHTS			
33-01-S	MAP LIGHT IN CONTROL WHEEL (PART OF 27-02-S)	0560059	(0.2)	(21.5)
33-02-S	UNDER WING COURTESY LIGHTS (SET OF 2)	0521101-8	0.5	61.0
33-03-S	NAVIGATION LIGHT DETECTORS	1221201-3,-4	0.0	40.8
33-04-S	FLASHING BEACON	0506003-6	1.4	204.7
33-05-S	WING TIP STROBE LIGHT	0501027-6	3.4	43.3
33-06-S	LANDING AND TAXI LIGHT INSTL IN WING	0523029-7	2.4	28.7
	34 - NAVIGATION			
34-01-R	INDICATOR, AIRSPEED	S3225-6	0.6	16.2
34-02-S	ALTERNATE STATIC AIR SOURCE	0501017-2	0.2	15.5
34-03-R	SENSITIVE ALTIMETER	S3288-1	0.9	14.0
34-04-S	BLIND ALTITUDE ENCODER INSTL	3930402-1	0.9	11.0
34-05-R	COMPASS INSTL, MAGNETIC	0513262-3	0.5	14.0
34-06-S	GYRO, INSTALLATION, REQUIRES 37-01-S	0501135-1	6.0*	13.0*
	- DIRECTIONAL GYRO	S3330-1	2.5	14.0
	- ATTITUDE GYRO	S3326-1	2.1	14.0
	- HOSES AND MISC HARDWARE	0501135-1	1.5	10.0
34-07-O	GYRO INSTL, REQUIRES 37-01-S & USED WITH 22-02-A OR 22-03-A	3900005	6.5*	13.1*
	- ATTITUDE GYRO	S3326-1	2.3	14.0
	- DIRECTIONAL GYRO	S3330-2	2.8	14.0
	- HOSES & MSIC HARDWARE	3900005	1.5	10.0

Figure 6-9. Equipment List Description (Sheet 4 of 8)

ITEM NO	EQUIPMENT LIST DESCRIPTION	REF DRAWING	WT LBS	ARM INS.
34-08-O	GYRO INSTL, REQUIRES 37-01-S & USED WITH 34-14-O	3900016	3.9*	11.8*
	- ATTITUDE GYRO	S3326-1	2.3	14.0
	- HOSES & MSIC HARDWARE	3900016	1.5	10.0
34-09-S	TURN COORDINATOR INDICATOR	S3291-1	1.0	15.8
34-10-S	VERTICAL SPEED INDICATOR	S3327-1	0.8	15.7
34-11-A	ADF INSTALLATION	3930408-1	10.4*	26.9*
	- KR 87 ADF RECEIVER	066-01072-0014	3.2	11.4
	- KI 227 ADF INDICATOR	066-03063-0000	0.7	15.8
	- ADF ANTENNA	3960187-1	4.2	39.3
	- ADF CABLE ASSEMBLY	3922102-1	2.3	29.0
34-12-A	GPS INSTALLATION	3930408-1	4.4*	15.3*
	- KING GPS-VFR, KLN-89	066-01148-1111	3.3	12.4
	- GPS ANTENNA	3960190-1	0.3	43.5
	- GPS CABLE ASSEMBLY		0.8	14.1
34-13-S	MODE C TRANSPONDER INSTL	3930404-1	4.1*	18.7*
	- KT 76C TRANSPONDER	066-01156-0101	2.4	13.5
	- TRANS CAL BLIND ENCODER	3930402-1	0.9	10.9
	- TRANSPONDER ANTENNA	3960191-1	0.2	85.3
	- HARDWARE & CABLE ASSEMBLY	3923102-1	0.6	28.9
34-14-O	HORIZONTAL SITUATION INDICATOR INSTL - NET WT INCREASE, REQUIRES 37-01-S	3900016-1	15.3*	84.1*
	- HSI	066-03046-0001	3.4	13.4
	- GYRO SLAVING METER	071-01242-0006	0.3	15.8
	- FLUX DETECTOR INSTL	3940264	0.7	52.6
	- REMOTE DIR GYRO-SLAVED	3940265	5.1	112.5
	- NAV CONVERTER INSTL	3940266	1.6	117.0
	- WIRING	3900016	8.0	60.7
	- STD GYRO INSTL - REMOVED	0501135	-13.6	3.6
	- GYRO INSTL FOR HSI INSTALLED	0501171	11.0	1.6
	- REMOVE #1 NAV INDICATOR		-1.2	13.9
	37 - VACUUM			
37-01-S	DUAL PUMP ENGINE DRIVEN VACUUM SYSTEM	0501135	5.4*	-1.8*
	- AIRBORNE VACUUM PUMP	E211CC	1.9	-6.5
	- AIRBORNE VACUUM PUMP	E212CW	1.9	-3.9
	- COOLING SHROUD	1201998-1	0.1	-6.5
	- COOLING SHROUD	1201998-1	0.1	-3.9
	- FILTER INSTALLATION	1201075-2	0.3	5.3
	- COMBINATION VACUUM INDICATOR/AMMETER	S3280-1	0.3	14.3
	- VACUUM RELIEF VALVE	2H3-48	0.3	4.7
	- MANIFOLD	1H5-25	0.5	-0.2
37-02-R	COMBINATION VACUUM GAGE/AMMETER	S3280-1	0.3	14.3

Figure 6-9. Equipment List Description (Sheet 5 of 8)

ITEM NO	EQUIPMENT LIST DESCRIPTION	REF DRAWING	WT LBS	ARM INS.
	53 - FUSELAGE			
53-01-S	REFUELING STEPS AND HANDLE INSTL	0513415-2	1.7	16.3
	56 - WINDOWS			
56-01-S	WINDOW - RIGHT HAND DOOR, OPENABLE	0517001-40	5.8*	48.5*
56-02-S	WINDOW - LEFT HAND DOOR, OPENABLE	0517001-39	5.8*	48.5*
	57 - WINGS			
57-01-O	HEAVY DUTY FLAPS, WT SHOWN NET CHG	0501165	- - -	- - -
	- TWO (2) FLAPS EXCHANGED	0523902	2.2	83.2
	- ONE (1) FLAP EXCHANGED	0523902	1.1	83.2
	61 - PROPELLER			
61-01-R	FIXED PITCH PROPELLER INSTALLATION	0550320-11	38.8*	-38.2*
	- MCCAULEY 76 INCH PROPELLER	1A170E/JHA7660	35.0	-38.4
	- MCCAULEY 3.5 INCH PROPELLER SPACER	C5464	3.6	-36.0
61-02-R	SPINNER INSTALLATION, PROPELLER	0550320-11	1.8*	-41.0*
	- SPINNER DOME ASSEMBLY	0550236-14	1.0	-42.6
	- FWD SPINNER BULKHEAD	0552231-1	0.3	-40.8
	- AFT SPINNER BULKHEAD	0550321-10	0.4	-37.3
61-03-O	POLISHED SPINNER - MILLENNIUM INSTL (NET CHANGE)	0550371-1	0.0	-41.0*
	71 - POWERPLANT			
71-01-R	AIR INTAKE FILTER, DONALDSON	P198281	0.3	-27.5
71-02-S	WINTERIZATION KIT INSTALLATION (STOWED) (INSTALLED ARM SHOWN)	0501128-3	0.8*	-20.3*
	- BREATHER TUBE INSULATION	0552011	0.4	-13.8
	- COWL INLET COVERS (INSTALLED)	0552229-3,-4	0.3	-32.0
	- COWL INLET COVERS (STOWED)	0552229-3,-4	0.3	95.0
71-03-R	ENGINE, LYCOMING IO-360-L2A	0550365-1	297.8*	-18.6*
	- FUEL INJECTOR, PAC RSA-5AD1		7.6	-13.9
	- MAGNETOS & HARNESS, SLICK 4371 (SET OF 2)		9.0	-5.0
	- OIL FILTER AND ADAPTER (CHAMPION)	CH48110	2.5	-18.5
	- SPARK PLUGS (CHAMPION)		1.9	-13.9
	- STARTER, LAMAR 31B22207		11.2	-23.0
71-04-O	MILLENNIUM ENGINE INSTL LYCOMING IO-360-L2A9918 (NET CHANGE)	0550372-1	0.0	-18.6

Figure 6-9. Equipment List Description (Sheet 6 of 8)

ITEM NO	EQUIPMENT LIST DESCRIPTION	REF DRAWING	WT LBS	ARM INS.
	73 - ENGINE FUEL & CONTROL			
73-01-S	EGT/FUEL FLOW INDICATOR	S3277-4	0.6	7.8
	77 - ENGINE INDICATING			
77-01-R	RECORDING TACHOMETER INSTALLATION	S3329-5	1.0	12.1
	78 - EXHAUST			
78-01-R	EXHAUST SYSTEM INSTALLATION	9954100-1	16.3*	-20.0*
	- MUFFLER & TAILPIPE WELD ASSY	9954000-2	4.6	-22.7
	- SHROUD ASSEMBLY, MUFFLER HEATER	9954100-3	0.8	-22.7
	79 - OIL			
79-01-R	OIL COOLER INSTALLATION	0550365-1	3.3*	-11.0*
	- OIL COOLER, STEWART WARNER	10877A	2.3	-11.0
79-02-R	OIL PRESSURE & TEMPERATURE INDICATOR	S3279-1	0.4	16.5
	90 - MISCELLANEOUS			
90-01-A	MILLENNIUM EQUIPMENT OPTION	0501300-1, -2	10.5	39.1
	- 11-04-O MILLENNIUM EXTERIOR STYLING	0504055-1, -2	0.0	95.4
	- 25-08-O SUNVISOR INSTALLATION MILLENNIUM	0519004-1		
	- MILLENNIUM UPHOLSTERY OPTION	0519005-1		
	- 25-03- O PILOT'S LEATHER/VINYL SEATS	0519005-1		
	- SIDEWALL INSERT MILLENNIUM UPHOLSTERY	0519006-1		
	- MILLENNIUM FLOOR MATS (SET OF 2)	0519005-1	2.1	15.0
	- STORAGE CONSOLE INSTALLATION	0519005-2	2.3	27.0
	- 32-04-O PREMIUM TIRE INSTL	0501166-1	4.1	47.1
	- 61-03-O POLISHED SPINNER INSTL	0550371-1	0.0	-41.0*
	- 72-02-O ENGINE INSTL	0550372-1	0.0	-18.6
	- POLISHED FASTENER INSTL	0552236-1	0.0	
	- MILLENNIUM CONTROL WHEEL PAD	1219012-1	0.0	
	98 - AVIONICS PACKAGES			
98-01-S	STANDARD AVIONICS PACKAGE	3900003-1	28.0	32.2
	- 22-01-S -WING LEVELER PROVISIONS	3900003	2.2	23.0
	- 23-05-S -BASIC AVIONICS INSTL	3900003-1	11.3	27.4
	- 23-04-S -MARKER BEACON/INTERCOM INSTL	3930407-1	2.5	19.7
	- 23-02-S -NAV/COM #1 INSTALLATION	3930407-1	7.9	52.7
	- 34-11-S -MODE C TRANSPONDER INSTL	3930407-1	4.1	18.7

Figure 6-9. Equipment List Description (Sheet 7 of 8)

ITEM NO	EQUIPMENT LIST DESCRIPTION	REF DRAWING	WT LBS	ARM INS.
98-02-A	NAV I AVIONICS PKG (NET CHANGE OVER STANDARD AVIONICS PKG)	3900004-1	21.3*	21.5*
	- 34-10-A -GPS INSTALLATION	3930408-1	4.4	15.3
	- 23-03-A -NAV/COM INSTL WITH G.S.	3930408-1	6.5	17.1
	- 34-09-A -ADF INSTALLATION	3930408-1	10.4	26.9
98-03-A	NAV II AVIONICS PKG (NET CHANGE OVER STANDARD AVIONICS PKG)	3900005-1	28.5*	27.1*
	- 98-02-A -NAV I AVN PKG	3900004-1	21.3	21.5
	- 22-02-A -SINGLE AXIS AUTOPILOT	3900005-1	7.2	43.6
98-04-A	NAV II WITH HSI AVIONICS PKG (NET CHANGE OVER STANDARD AVIONICS PKG)	3900016	43.8*	47.0*
	- 98-02-A -NAV I AVN PKG	3900004-1	21.3	21.5
	- 22-02-A -SINGLE AXIS AUTOPILOT	3900005-1	7.2	43.6
	- 34-12-O -HSI GYRO INSTL	3900016-1	15.3	84.1
98-05-A	NAV III WITH HSI AVIONICS PKG (NET CHANGE OVER STANDARD AVIONICS PKG)	3900018	56.3*	67.5*
	- 98-02-A -NAV I AVN PKG	3900004-1	21.3	21.5
	- 22-03-A -2-AXIS AUTOPILOT	3900003	19.7	104.4
	- 34-12-O -HSI GYRO INSTL	3900016-1	15.3	84.1
98-06-A	NAV III WITHOUT HSI AVIONICS PKG (NET CHANGE OVER STANDARD AVIONICS PKG)	3900021	41.0*	61.3*
	- 98-02-A -NAV I AVN PKG	3900004-1	21.3	21.5
	- 22-03-A -2-AXIS AUTOPILOT	3900003	19.7	104.4

Figure 6-9. Equipment List Description (Sheet 8 of 8)

SECTION 7
AIRPLANE & SYSTEMS DESCRIPTION

TABLE OF CONTENTS

	Page
Introduction	7-5
Airframe	7-5
Flight Controls	7-6
Trim System	7-6
Instrument Panel	7-9
Pilot Side Panel Layout	7-9
Center Panel Layout	7-9
Copilot Side Panel Layout	7-12
Center Pedestal Layout	7-12
Ground Control	7-12
Wing Flap System	7-13
Landing Gear System	7-14
Baggage Compartment	7-14
Seats	7-14
Integrated Seat Belt/Shoulder Harness	7-15
Entrance Doors And Cabin Windows	7-17
Control Locks	7-18

TABLE OF CONTENTS (Continued)

	Page
Engine	7-19
Engine Controls	7-19
Engine Instruments	7-19
New Engine Break-In And Operation	7-21
Engine Lubrication System	7-21
Ignition And Starter System	7-22
Air Induction System	7-22
Exhaust System	7-23
Cooling System	7-23
Propeller	7-23
Fuel System	7-23
Fuel Distribution	7-24
Fuel Indicating	7-25
Fuel Venting	7-26
Reduced Tank Capacity	7-26
Fuel Selector Valve	7-26
Fuel Drain Valves	7-28
Brake System	7-29
Electrical System	7-29
Annunciator Panel	7-32
Master Switch	7-33
Avionics Master Switch	7-34
Ammeter	7-34
Low Voltage Annunciation	7-35
Circuit Breakers And Fuses	7-35
Ground Service Plug Receptacle	7-36

TABLE OF CONTENTS (Continued)

	Page
Lighting Systems	7-37
Exterior Lighting	7-37
Interior Lighting	7-37
Cabin Heating, Ventilating And Defrosting System	7-39
Pitot-Static System And Instruments	7-41
Airspeed Indicator	7-42
Vertical Speed Indicator	7-42
Altimeter	7-43
Vacuum System And Instruments	7-43
Attitude Indicator	7-43
Directional Indicator	7-43
Vacuum Gauge	7-45
Low Vacuum Annunciation	7-45
Clock / O.A.T. Indicator	7-46
Stall Warning System	7-46
Standard Avionics	7-46
Avionics Support Equipment	7-47
Avionics Cooling Fan	7-47
Microphone And Headset Installations	7-47
Static Dischargers	7-48
Cabin Features	7-49
Emergency Locator Transmitter (ELT)	7-49
Cabin Fire Extinguisher	7-49

INTRODUCTION

This section provides description and operation of the airplane and its systems. Some equipment described herein is optional and may not be installed in the airplane. Refer to the Supplements, Section 9, for details of other optional systems and equipment.

AIRFRAME

The airplane is an all metal, four-place, high wing, single engine airplane equipped with tricycle landing gear and is designed for general utility and training purposes.

The construction of the fuselage is a conventional formed sheet metal bulkhead, stringer, and skin design referred to as semimonocoque. Major items of structure are the front and rear carry through spars to which the wings are attached, a bulkhead and forgings for main landing gear attachment at the base of the rear door posts, and a bulkhead with attach fittings at the base of the forward door posts for the lower attachment of the wing struts. Four engine mount stringers are also attached to the forward door posts and extend forward to the firewall.

The externally braced wings, containing integral fuel tanks, are constructed of a front and rear spar with formed sheet metal ribs, doublers, and stringers. The entire structure is covered with aluminum skin. The front spars are equipped with wing-to-fuselage and wing-to-strut attach fittings. The aft spars are equipped with wing-to-fuselage attach fittings, and are partial span spars. Conventional hinged ailerons and single slot type flaps are attached to the trailing edge of the wings. The ailerons are constructed of a forward spar containing balance weights, formed sheet metal ribs and "V" type corrugated aluminum skin joined together at the trailing edge. The flaps are constructed basically the same as the ailerons, with the exception of the balance weights and the addition of a formed sheet metal leading edge section.

The empennage (tail assembly) consists of a conventional vertical stabilizer, rudder, horizontal stabilizer, and elevator. The vertical stabilizer consists of a spar, formed sheet metal ribs and reinforcements, a wraparound skin panel, formed leading edge skin and a dorsal. The rudder is constructed of a formed leading edge skin and spar with attached hinge brackets and ribs, a center spar, a wrap around skin, and a ground adjustable trim tab at the base of the trailing edge. The top of the rudder incorporates a leading edge extension which contains a balance weight.

The horizontal stabilizer is constructed of a forward and aft spar, ribs and stiffeners, center, left, and right wrap around skin panels, and formed leading edge skins. The horizontal stabilizer also contains the elevator trim tab actuator.

Construction of the elevator consists of formed leading edge skins, a forward spar, aft channel, ribs, torque tube and bellcrank, left upper and lower "V" type corrugated skins, and right upper and lower "V" type corrugated skins incorporating a trailing edge cutout for the trim tab. The elevator tip leading edge extensions incorporate balance weights. The elevator trim tab consists of a spar, rib, and upper and lower "V" type corrugated skins.

FLIGHT CONTROLS

The airplane's flight control system (Refer to Figure 7-1) consists of conventional aileron, rudder, and elevator control surfaces. The control surfaces are manually operated through cables and mechanical linkage using a control wheel for the ailerons and elevator, and rudder/brake pedals for the rudder.

TRIM SYSTEM

A manually operated elevator trim system is provided (Refer to Figure 7-1). Elevator trimming is accomplished through the elevator trim tab by utilizing the vertically mounted trim control wheel in the cockpit. Forward rotation of the trim wheel will trim nose down; conversely, aft rotation will trim nose up.

AILERON CONTROL SYSTEM

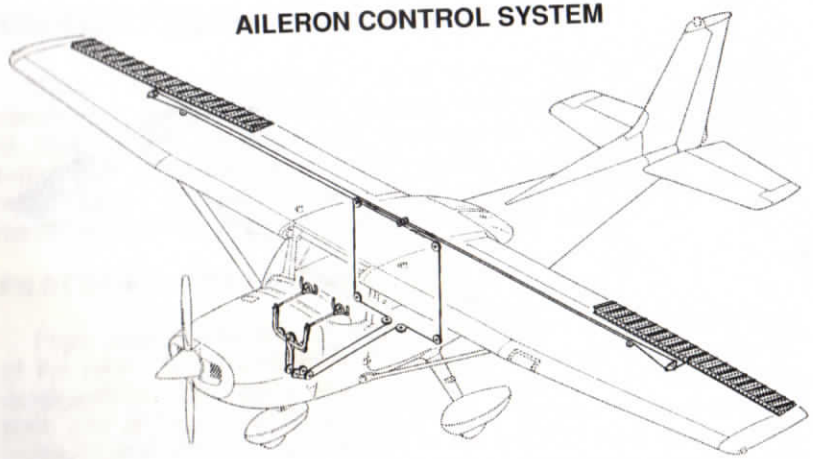

RUDDER CONTROL SYSTEM



0585X1017

Figure 7-1. Flight Control and Trim Systems (Sheet 1 of 2)

ELEVATOR CONTROL SYSTEM

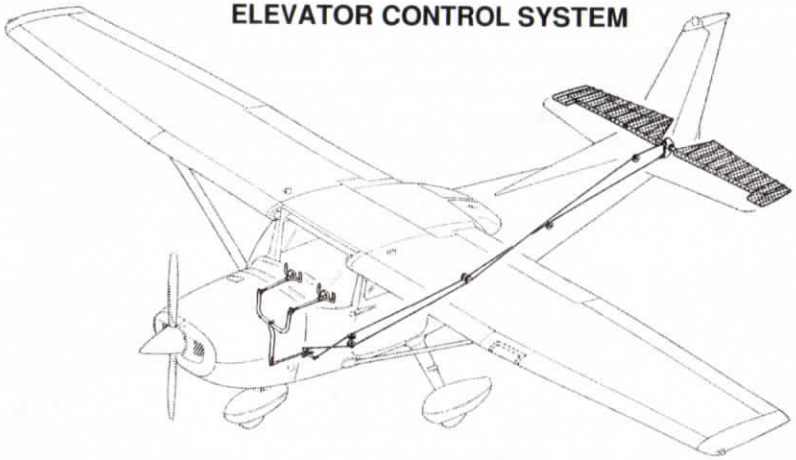

ELEVATOR TRIM CONTROL SYSTEM

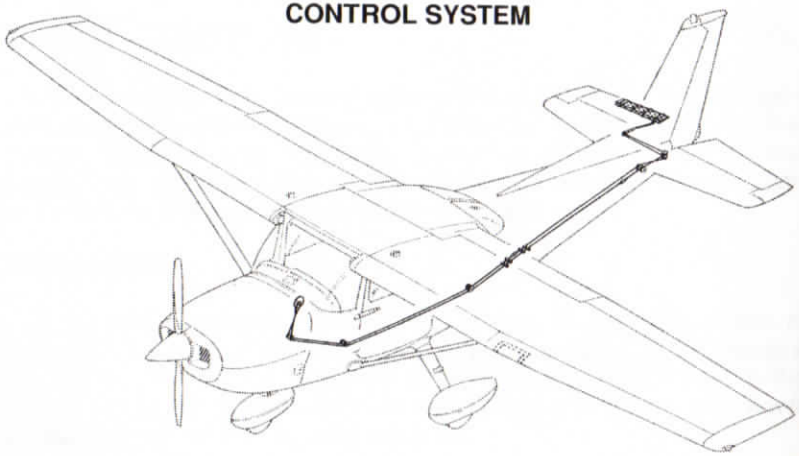

0585X1018

Figure 7-1. Flight Control and Trim Systems (Sheet 2 of 2)

INSTRUMENT PANEL

The instrument panel (Refer to Figure 7-2) is of all-metal construction, and is designed in segments to allow related groups of instruments, switches and controls to be removed without removing the entire panel. For specific details concerning the instruments, switches, circuit breakers, and controls on the instrument panel, refer to related topics in this section.

PILOT SIDE PANEL LAYOUT

Flight instruments are contained in a single panel located in front of the pilot. These instruments are designed around the basic "T" configuration. The gyros are located immediately in front of the pilot, and arranged vertically over the control column. The airspeed indicator and altimeter are located to the left and right of the gyros, respectively. The remainder of the flight instruments are clustered around the basic "T". An annunciator panel is located above the altimeter and provides caution and warning messages for fuel quantity, oil pressure, low vacuum and low voltage situations.

To the right of the flight instruments is a sub panel which contains engine tachometer and various navigational heading instruments. To the left of the flight instruments is a sub panel which contains a left/right fuel quantity indicator, an oil temperature/oil pressure indicator, a vacuum gage/ammeter, an EGT/fuel flow indicator, a digital clock /O.A.T. indicator and the avionics circuit breaker panel.

Below the engine and flight instruments are circuit breakers and switches for the airplane systems and equipment. Master, Avionics Master and ignition switches are also located in this area of the panel. The parking brake control is positioned below the switch and circuit breaker panel.

CENTER PANEL LAYOUT

The center panel contains various avionics equipment arranged in a vertical rack. This arrangement allows each component to be removed without having to access the backside of the panel. Below the panel are the throttle, mixture, alternate static air and lighting controls.

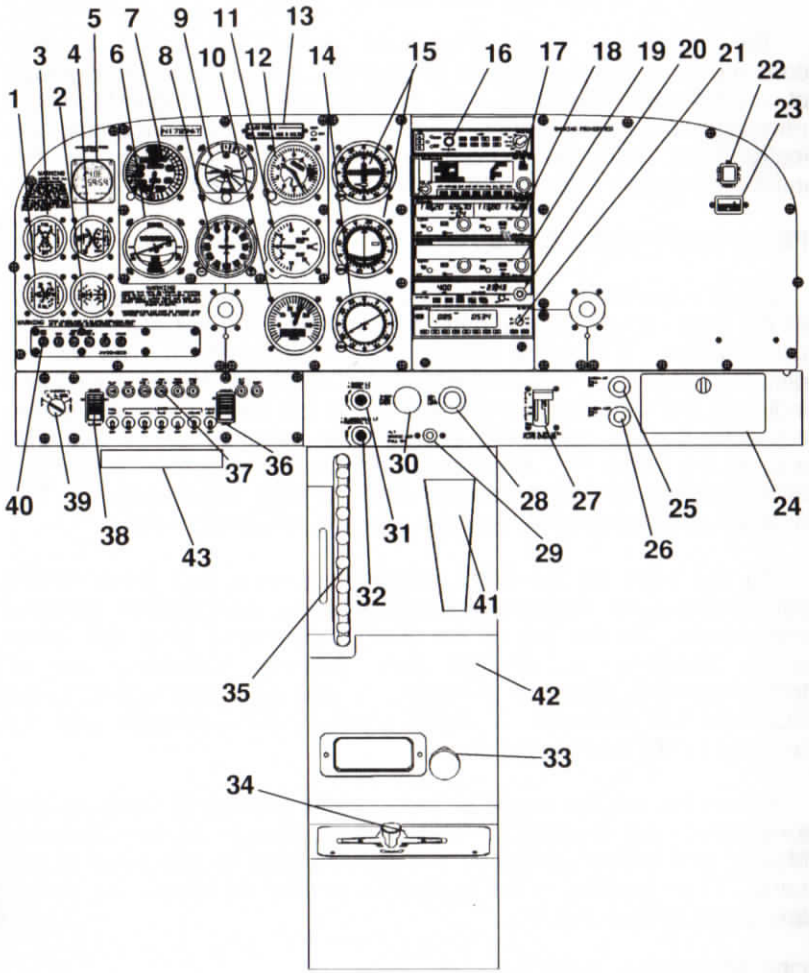

0585C1040

Figure 7-2. Instrument Panel (Sheet 1 of 2)

1. Oil Temperature and Oil Pressure Indicator
2. Vacuum Gage and Ammeter
3. Fuel Quantity Indicator
4. EGT/Fuel Flow Indicator
5. Digital Clock / O.A.T. Indicator
6. Turn Coordinator
7. Airspeed Indicator
8. Directional Gyro
9. Attitude Indicator
10. Tachometer
11. Vertical Speed Indicator
12. Altimeter
13. Annunciator Panel
14. ADF Bearing Indicator
15. Course Deviation and Glide Slope Indicators
16. Audio Control Panel
17. GPS Receiver
18. Nav/Com Radio #1
19. Nav/Com Radio #2
20. ADF Receiver
21. Transponder
22. ELT Remote Test Button
23. Hour Meter
24. Glove Box
25. Cabin Heat Control
26. Cabin Air Control
27. Flap Switch and Position Indicator
28. Mixture Control
29. Alternate Static Air Control
30. Throttle Control
31. Radio and Panel Dimming Control
32. Glareshield and Pedestal Dimming Control
33. Fuel Shutoff Valve Control
34. Fuel Selector
35. Elevator Trim Control and Position Indicator
36. Avionics Master Switch
37. Circuit Breakers and Switch/Breakers
38. Master Switch
39. Ignition Switch
40. Avionics Circuit Breaker Panel
41. Hand Held Microphone
42. 12 VDC Power Port (Location may vary)
43. Parking Brake

Figure 7-2. Instrument Panel (Sheet 2)

RH SIDE PANEL LAYOUT

The RH panel contains the hour meter, ELT switch, and room for expansion of indicators and other avionics equipment. Below this sub panel are the glove box, cabin heat and cabin air controls, and wing flap switch.

CENTER PEDESTAL LAYOUT

The center pedestal, located below the center panel, contains the elevator trim control wheel, position indicator, handheld microphone bracket and fuel shutoff valve control. The fuel selector valve handle is located at the base of the pedestal.

GROUND CONTROL

Effective ground control while taxiing is accomplished through nose wheel steering by using the rudder pedals; left rudder pedal to steer left and right rudder pedal to steer right. When a rudder pedal is depressed, a spring loaded steering bungee (which is connected to the nose gear and to the rudder bars) will turn the nose wheel through an arc of approximately 10° each side of center. By applying either left or right brake, the degree of turn may be increased up to 30° each side of center.

Moving the airplane by hand is most easily accomplished by attaching a tow bar to the nose gear strut. If a tow bar is not available, or pushing is required, use the wing struts as push points. Do not use the vertical or horizontal surfaces to move the airplane. If the airplane is to be towed by vehicle, never turn the nose wheel more than 30° either side of center or structural damage to the nose gear could result.

The minimum turning radius of the airplane, using differential braking and nose wheel steering during taxi, is approximately 27 feet. To obtain a minimum radius turn during ground handling, the airplane may be rotated around either main landing gear by pressing down on a tailcone bulkhead just forward of the horizontal stabilizer to raise the nose wheel off the ground. Care should be exercised to ensure that pressure is exerted only on the bulkhead area and not on skin between the bulkheads. Pressing down on the horizontal stabilizer is not recommended.

WING FLAP SYSTEM

The single-slot type wing flaps (Refer to Figure 7-3), are extended or retracted by positioning the wing flap switch lever on the instrument panel to the desired flap deflection position. The switch lever is moved up or down in a slotted panel that provides mechanical stops at the 10°, 20° and 30° positions. To change flap setting, the flap lever is moved to the right to clear mechanical stops at the 10° and 20° positions. A scale and pointer to the left of the flap switch indicates flap travel in degrees. The wing flap system circuit is protected by a 10-ampere circuit breaker, labeled FLAP, on the left side of the control panel.

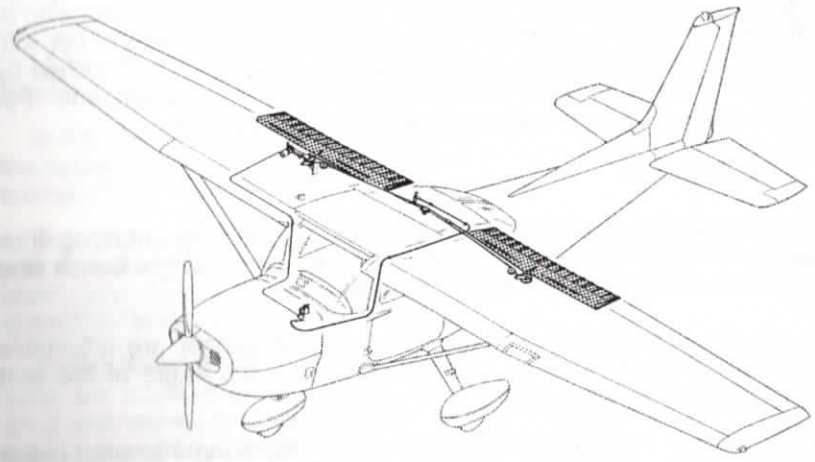

0585X1021

Figure 7-3. Wing Flap System

LANDING GEAR SYSTEM

The landing gear is of the tricycle type, with a steerable nose wheel and two main wheels. Wheel fairings are standard equipment for both the main and nose wheels. Shock absorption is provided by the tubular spring steel main landing gear struts and the air/oil nose gear shock strut. Each main gear wheel is equipped with a hydraulically actuated disc type brake on the inboard side of each wheel.

BAGGAGE COMPARTMENT

The baggage compartment consists of two areas, one extending from behind the rear passengers seat to the aft cabin bulkhead, and an additional area aft of the bulkhead. Access to both baggage areas is gained through a lockable baggage door on the left side of the airplane, or from within the airplane cabin. A baggage net with tiedown straps is provided for securing baggage and is attached by tying the straps to tiedown rings provided in the airplane. For baggage area and door dimensions, refer to Section 6.

SEATS

The seating arrangement consists of two vertically adjusting crew seats for the pilot and front seat passenger, and a single bench seat with adjustable back for rear seat passengers.

Seats used for the pilot and front seat passenger are adjustable fore and aft, and up and down. Additionally, the angle of the seat back is infinitely adjustable.

Fore and aft adjustment is made using the handle located below the center of the seat frame. To position the seat, lift the handle, slide the seat into position, release the handle and check that the seat is locked in place. To adjust the height of the seat, rotate the large crank under the right hand corner of the seat until a comfortable height is obtained. To adjust the seat back angle, pull up on the release button, located in the center front of seat, just under the seat bottom, position the seat back to the desired angle, and release the button. When the seat is not occupied, the seat back will automatically fold forward whenever the release button is pulled up.

The rear passengers' seat consists of a fixed, one piece seat bottom and a three-position, reclining back. The reclining back is adjusted by a lever located below the center of the seat frame. To adjust the seat back, raise the lever, position the seat back to the desired angle, release the lever and check that the back is locked in place.

Headrests are installed on both the front and rear seats. To adjust the headrest, apply enough pressure to it to raise or lower it to the desired level.

INTEGRATED SEAT BELT/SHOULDER HARNESS

All seat positions are equipped with integrated seat belts/shoulder harness assemblies (Refer to Figure 7-4). The design incorporates an overhead inertia reel for the shoulder portion, and a retractor assembly for the lap portion of the belt. This design allows for complete freedom of movement of the upper torso area while providing restraint in the lap belt area. In the event of a sudden deceleration, reels lock up to provide positive restraint for the user.

In the front seats, the inertia reels are located on the centerline of the upper cabin. In the rear seats, the inertia reels are located outboard of each passenger in the upper cabin.

To use the integrated seat belt/shoulder harness, grasp the link with one hand, and, in a single motion, extend the assembly and insert into the buckle. Positive locking has occurred when a distinctive "snap" sound is heard.

Proper locking of the lap belt can be verified by ensuring that the belts are allowed to retract into the retractors and the lap belt is snug and low on the waist as worn normally during flight. No more than one additional inch of belt should be able to be pulled out of the retractor once the lap belt is in place on the occupant. If more than one additional inch of belt can be pulled out of the retractor, the occupant is too small for the installed restraint system and the aircraft should not be occupied until the occupant is properly restrained.

Removal is accomplished by lifting the release mechanism on the buckle or by pressing the release button on the buckle and pulling out and up on the harness. Spring tension on the inertia reel will automatically stow the harness.

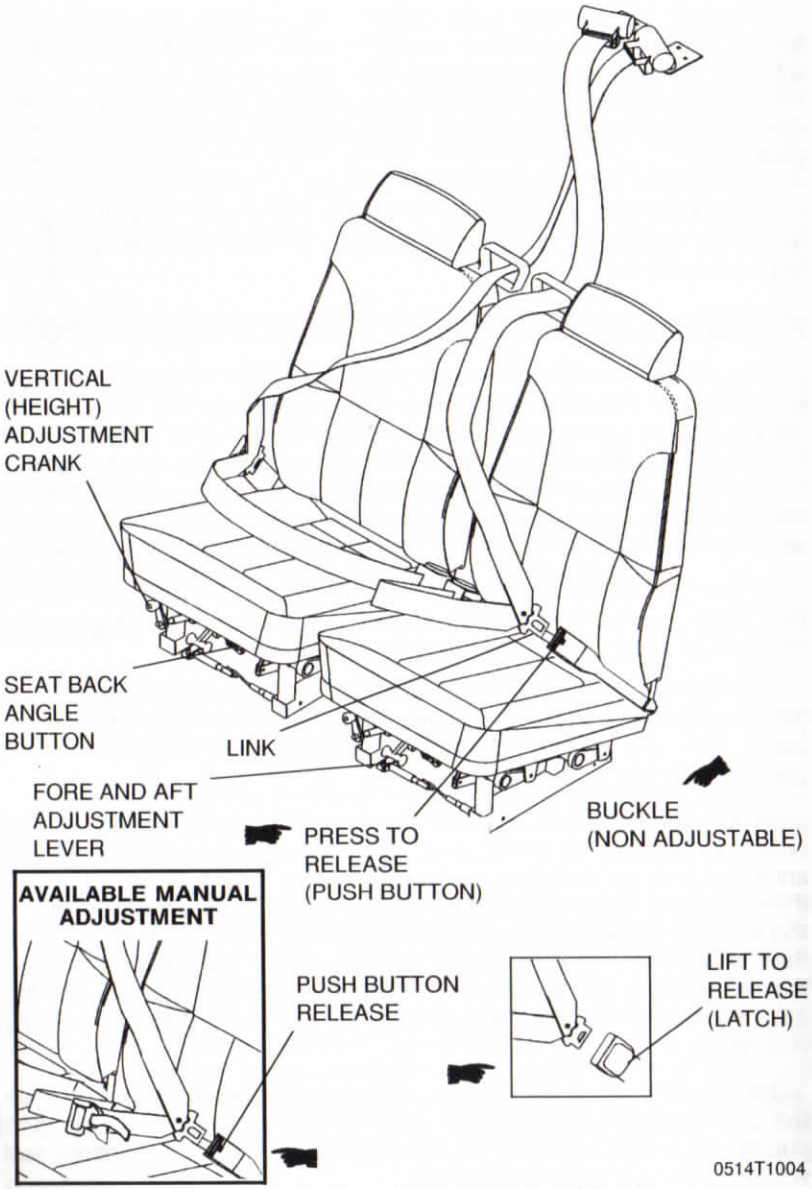

Figure 7-4. Crew Seats, Seat Belts and Shoulder Harnesses

A manually adustable seat belt/shoulder harness assembly is available for all seats.

To use the manually adjustable seat belt/shoulder harness, fasten and adjust the seat belt/shoulder harness first. Lengthen the seat belt as required by pulling on the release strap on the belt. Snap the connecting link firmly into the buckle, then adjust to length. A properly adjusted harness will permit the occupant to lean forward enough to sit erect, but prevent excessive forward movement and contact with objects during sudden deceleration. Also, the pilot must have the freedom to reach all controls easily.

Disconnecting the manually adjustable seat belt/shoulder harness is accomplished by pushing the button on the buckle to release the connecting link.

ENTRANCE DOORS AND CABIN WINDOWS

Entry to, and exit from the airplane is accomplished through either of two entry doors, one on each side of the cabin at the front seat positions (refer to Section 6 for cabin and cabin door dimensions). The doors incorporate a recessed exterior door handle, a conventional interior door handle, a key operated door lock (left door only), a door stop mechanism, and openable windows in both the left and right doors.

NOTE

The door latch design on this model requires that the outside door handle on the pilot and front passenger doors be extended out whenever the doors are open. When closing the door, do not attempt to push the door handle in until the door is fully shut.

To open the doors from outside the airplane, utilize the recessed door handle near the aft edge of either door by grasping the forward edge of the handle and pulling outboard. To close or open the doors from inside the airplane, use the combination door handle and arm rest. The inside door handle has three positions and a placard at its base which reads OPEN, CLOSE, and LOCK. The handle is spring loaded to the CLOSE (up) position. When the door has been pulled shut and latched, lock it by rotating the door handle forward to the LOCK position (flush with the arm rest). When the handle is rotated to the LOCK position, an over center action will hold it in that position. Both cabin doors should be locked prior to flight, and should not be opened intentionally during flight.

NOTE

Accidental opening of a cabin door in flight due to improper closing does not constitute a need to land the airplane. The best procedure is to set up the airplane in a trimmed condition at approximately 75 KIAS, momentarily shove the door outward slightly, and forcefully close and lock the door.

Exit from the airplane is accomplished by rotating the door handle from the LOCK position, past the CLOSE position, aft to the OPEN position and pushing the door open. To lock the airplane, lock the right cabin door with the inside handle, close the left cabin door, and using the ignition key, lock the door.

The left and right cabin doors are equipped with openable windows which are held in the closed position by a detent equipped latch on the lower edge of the window frame. To open the windows, rotate the latch upward. Each window is equipped with a spring-loaded retaining arm which will help rotate the window outward, and hold it there. If required, either window may be opened at any speed up to 163 KIAS. The rear side windows and rear windows are of the fixed type and cannot be opened.

CONTROL LOCKS

A control lock is provided to lock the aileron and elevator control surfaces to prevent damage to these systems by wind buffeting while the airplane is parked. The lock consists of a shaped steel rod and flag. The flag identifies the control lock and cautions about its removal before starting the engine. To install the control lock, align the hole in the top of the pilot's control wheel shaft with the hole in the top of the shaft collar on the instrument panel and insert the rod into the aligned holes. Installation of the lock will secure the ailerons in a neutral position and the elevators in a slightly trailing edge down position. Proper installation of the lock will place the flag over the ignition switch. In areas where high or gusty winds occur, a control surface lock should be installed over the vertical stabilizer and rudder. The control lock and any other type of locking device should be removed prior to starting the engine.

ENGINE

The airplane is powered by a horizontally opposed, four cylinder, overhead valve, air-cooled, fuel-injected engine with a wet sump lubrication system. The engine is a Lycoming Model IO-360-L2A and is rated at 180 horsepower at 2700 RPM. Major accessories include a starter and belt driven alternator mounted on the front of the engine, and dual magnetos, dual vacuum pumps, and a full flow oil filter mounted on the rear of the engine accessory case.

ENGINE CONTROLS

Engine power is controlled by a throttle located on the switch and control panel above the center pedestal. The throttle is open in the full forward position and closed in the full aft position. A friction lock, which is a round knurled knob, is located at the base of the throttle and is operated by rotating the lock clockwise to increase friction or counterclockwise to decrease it.

The mixture control, mounted adjacent to the throttle control, is a red knob with raised points around the circumference and is equipped with a lock button in the end of the knob. The rich position is full forward, and full aft is the idle cutoff position. For small adjustments, the control may be moved forward by rotating the knob clockwise, and aft by rotating the knob counterclockwise. For rapid or large adjustments, the knob may be moved forward or aft by depressing the lock button in the end of the control, and then positioning the control as desired.

ENGINE INSTRUMENTS

Engine operation is monitored by the following instruments: oil pressure/oil temperature indicator, tachometer and exhaust gas temperature (EGT) indicator. In addition, the annunciator panel contains a red OIL PRESS annunciator which comes on when the oil pressure is low.

See Section 2, Limitations, for engine operating limitations and instrument markings.

Oil pressure signals are generated from an oil pressure line/transducer combination. An oil pressure line is routed from the upper front of the engine case to the rear engine baffle. At the baffle, the oil pressure line is connected to a transducer. This transducer produces an electrical signal which is translated into a pressure reading by the oil pressure gage located on the LH instrument panel.

In addition, a separate low oil pressure indication is provided through the panel annunciator. This annunciator is wired to a pressure switch located on the rear of the engine accessory case. When oil pressure is below 20 PSI, the switch grounds and completes the annunciator circuit, illuminating the red OIL PRESS light. When pressure exceeds 20 PSI, the ground is removed and the OIL PRESS annunciator goes out.

NOTE

The low oil pressure switch is also connected to the hour (Hobbs) meter. When pressure exceeds 20 PSI, a ground is supplied to the hour meter, completing the hour meter circuit.

Oil temperature signals are generated from a resistance-type probe located in the engine accessory case. As oil temperature changes, the probe resistance changes. This resistance is translated into oil temperature readings on the cockpit indicator.

The engine driven mechanical tachometer is located on the instrument panel to the right of the pilot's control wheel. The instrument is calibrated in increments of 100 RPM and indicates both engine and propeller speed. An hour meter in the lower section of the dial records elapsed engine time in hours and tenths. Instrument markings include the normal operating range (green arc) from 1900 to 2400 RPM.

The exhaust gas temperature (EGT) indicator is located on the LH instrument panel as part of the EGT/Fuel Flow indicator. Since exhaust gas temperature varies with fuel-air ration (mixture), density altitude, throttle position and RPM, the instrument is a useful aid in adjusting the mixture for best economy or performance. The EGT indicator allows the pilot to lean (reduce the proportion of fuel in the fuel-air mixture) to a known value using the maximum or "peak" exhaust gas temperature as a reference. An index pointer which can be positioned manually is provided for the pilot to mark the location of the peak. **Never lean using EGT when operating at more than 75% power.**

The EGT system uses a thermocouple in the engine exhaust (tailpipe) to supply a voltage proportional to exhaust gas temperature. The EGT indicator responds to the voltage developed by the thermocouple. As the mixture is leaned (from full rich), the exhaust gas temperature will increase to a maximum value as the stoichiometric (most chemically efficient) fuel-air ratio is achieved and will decrease if the mixture continues to be leaned.

NEW ENGINE BREAK-IN AND OPERATION

The engine underwent a run in at the factory and is ready for the full range of use. It is, however, suggested that cruising be accomplished at 75% power as much as practicable until a total of 50 hours has accumulated or oil consumption has stabilized. This will ensure proper seating of the piston rings.

ENGINE LUBRICATION SYSTEM

The engine utilizes a full-pressure, wet-sump type lubrication system with aviation-grade oil used as the lubricant. The capacity of the engine sump (located on the bottom of the engine) is eight quarts. Oil is drawn from the sump through an oil suction strainer screen into the engine-driven oil pump. From the pump, oil is routed to a bypass valve. If the oil is cold, the bypass valve allows the oil to bypass the oil cooler and go directly from the pump to the full flow oil filter. If the oil is hot, the bypass valve routes the oil out of the accessory housing and into a flexible hose leading to the oil cooler on the right, rear engine baffle. Pressure oil from the cooler returns to the accessory housing where it passes through the full flow oil filter. The filter oil then enters a pressure relief valve which regulates engine oil pressure by allowing excessive oil to return to the sump while the balance of the oil is circulated to various engine parts for lubrication. Residual oil is returned to the sump by gravity flow.

An oil filler cap/oil dipstick is located at the right rear of the engine. The filler cap/ dipstick is accessible through an access door on the top right side of the engine cowling. The engine should not be operated on less than five quarts of oil. For extended flight, fill to eight quarts (dipstick indication only). For engine oil grade and specifications, refer to Section 8 of this handbook.

IGNITION AND STARTER SYSTEM

Engine ignition is provided by two engine-driven magnetos, and two spark plugs in each cylinder. The right magneto fires the lower right and upper left spark plugs, and the left magneto fires the lower left and upper right spark plugs. Normal operation is conducted with both magnetos due to the more complete burning of the fuel/air mixture with dual ignition.

Ignition and starter operation is controlled by a rotary-type switch located on the left switch and control panel. The switch is labeled clockwise, OFF, R, L, BOTH, and START. The engine should be operated on both magnetos (BOTH position) except for magneto checks. The R and L positions are for checking purposes and emergency use only. When the switch is rotated to the spring loaded START position, (with the master switch in the ON position), the starter contactor is closed and the starter, now energized, will crank the engine. When the switch is released, it will automatically return to the BOTH position.

AIR INDUCTION SYSTEM

The engine air induction system receives ram air through an intake on the lower front portion of the engine cowling. The intake is covered by an air filter which removes dust and other foreign matter from the induction air. Airflow passing through the filter enters an air box. The air box has a spring-loaded alternate air door. If the air induction filter should become blocked, suction created by the engine will open the door and draw unfiltered air from inside the lower cowl area. An open alternate air door will result in an approximate 10% power loss at full throttle. After passing through the air box, induction air enters a fuel/air control unit under the engine, and is then ducted to the engine cylinders through intake manifold tubes.

EXHAUST SYSTEM

Exhaust gas from each cylinder passes through riser assemblies to a muffler and tailpipe. Outside air is pulled in around shrouds which are constructed around the outside of the muffler to form heating chambers which supply heat to the cabin.

COOLING SYSTEM

Ram air for engine cooling enters through two intake openings in the front of the engine cowling. The cooling air is directed around the cylinders and other areas of the engine by baffling, and is then exhausted through an opening at the bottom aft edge of the cowling. No manual cowl flap cooling system control is required.

PROPELLER

The airplane is equipped with a two bladed, fixed pitch, one-piece forged aluminum alloy propeller which is anodized to retard corrosion. The propeller is 76 inches in diameter.

FUEL SYSTEM

The airplane fuel system (see Figure 7-6) consists of two vented integral fuel tanks (one tank in each wing), a three-position selector valve, auxiliary fuel pump, fuel shutoff valve, fuel strainer, engine driven fuel pump, fuel/air control unit, fuel distribution valve and fuel injection nozzles.

⚠ WARNING

UNUSABLE FUEL LEVELS FOR THIS AIRPLANE WERE DETERMINED IN ACCORDANCE WITH FEDERAL AVIATION REGULATIONS. FAILURE TO OPERATE THE AIRPLANE IN COMPLIANCE WITH FUEL LIMITATIONS SPECIFIED IN SECTION 2 MAY FURTHER REDUCE THE AMOUNT OF FUEL AVAILABLE IN FLIGHT.

FUEL TANKS	FUEL LEVEL (QUANTITY EACH TANK)	TOTAL FUEL	TOTAL UNUSABLE	TOTAL USABLE ALL FLIGHT CONDITIONS
Two	Full (28.0)	56.0	3.0	53.0

Figure 7-5. Fuel Quantity Data in U.S. Gallons

FUEL DISTRIBUTION

Fuel flows by gravity from the two wing tanks to a three-position selector valve, labeled BOTH, RIGHT and LEFT and on to the reservoir tank. From the reservoir tank fuel flows through the auxiliary fuel pump, past the fuel shutoff valve, through the fuel strainer to an engine driven fuel pump.

From the engine-driven fuel pump, fuel is delivered to the fuel/air control unit, where it is metered and directed to a fuel distribution valve (manifold) which distributes it to each cylinder. Fuel flow into each cylinder is continuous, and flow rate is determined by the amount of air passing through the fuel/air control unit.

Starting at serial number 172S9491 and on, and airplanes incorporating MK172-28-01, a fuel return system was added to promote smooth engine operation on the ground during hot weather. The return system carries a metered amount of fuel from the engine fuel-air control unit to the fuel reservoir tank. The increased fuel flow due to the return system results in lower fuel temperatures at the engine inlet, and helps to minimize the amount of fuel vapor generated in the fuel lines during high OAT operations.

FUEL INDICATING

Fuel quantity is measured by two float type fuel quantity transmitters (one in each tank) and indicated by an electrically operated fuel quantity indicator on the left side of the instrument panel. The gauges are marked in gallons of fuel. An empty tank is indicated by a red line and the number 0. When an indicator shows an empty tank, approximately 1.5 gallons remain in each tank as unusable fuel. The indicators should not be relied upon for accurate readings during skids, slips, or unusual attitudes.

Each fuel tank also incorporates warning circuits which can detect low fuel conditions and erroneous transmitter messages. Anytime fuel in the tank drops below approximately 5 gallons (and remains below this level for more than 60 seconds), the amber LOW FUEL message will flash on the annunciator panel for approximately 10 seconds and then remain steady amber. The annunciator cannot be turned off by the pilot. If the left tank is low, the message will read L LOW FUEL. If the right tank is low, the message will read LOW FUEL R. If both tanks are low, the message will read L LOW FUEL R.

In addition to low fuel annunciation, the warning circuitry is designed to report failures with each transmitter caused by shorts, opens or transmitter resistance which increases over time. If the circuitry detects any one of these conditions, the fuel level indicator needle will go to the OFF position (below the 0 mark on the fuel indicator), and the amber annunciator will illuminate. If the left tank transmitter has failed, the message will read L LOW FUEL. If the right tank transmitter has failed, the message will read LOW FUEL R. If both tanks transmitters have failed, the message will read L LOW FUEL R.

Fuel pressure is measured by use of a transducer mounted near the fuel manifold. This transducer produces an electrical signal which is translated for the cockpit-mounted indicator in gallons-per-hour.

FUEL VENTING

Fuel system venting is essential to system operation. Blockage of the system will result in decreasing fuel flow and eventual engine stoppage. Venting is accomplished by an interconnecting line from the right fuel tank to the left tank. The left fuel tank is vented overboard through a vent line, equipped with a check valve, which protrudes from the bottom surface of the left wing near the wing strut. Both fuel filler caps are also vented.

REDUCED TANK CAPACITY

The airplane may be serviced to a reduced capacity to permit heavier cabin loadings. This is accomplished by filling each tank to the bottom edge of the fuel filler tab, thus giving a reduced fuel load of 17.5 gallons usable in each tank.

FUEL SELECTOR VALVE

The fuel selector valve should be in the BOTH position for takeoff, climb, landing, and maneuvers that involve prolonged slips or skids of more than 30 seconds. Operation from either LEFT or RIGHT tank is reserved for cruising flight.

NOTE

When the fuel selector valve handle is in the BOTH position in cruising flight, unequal fuel flow from each tank may occur if the wings are not maintained exactly level. Resulting wing heaviness can be alleviated gradually by turning the selector valve handle to the tank in the "heavy" wing. It is not practical to measure the time required to consume all of the fuel in one tank, and, after switching to the opposite tank, expect an equal duration from the remaining fuel. The airspace in both fuel tanks is interconnected by a vent line and, therefore, some sloshing of fuel between tanks can be expected when the tanks are nearly full and the wings are not level.

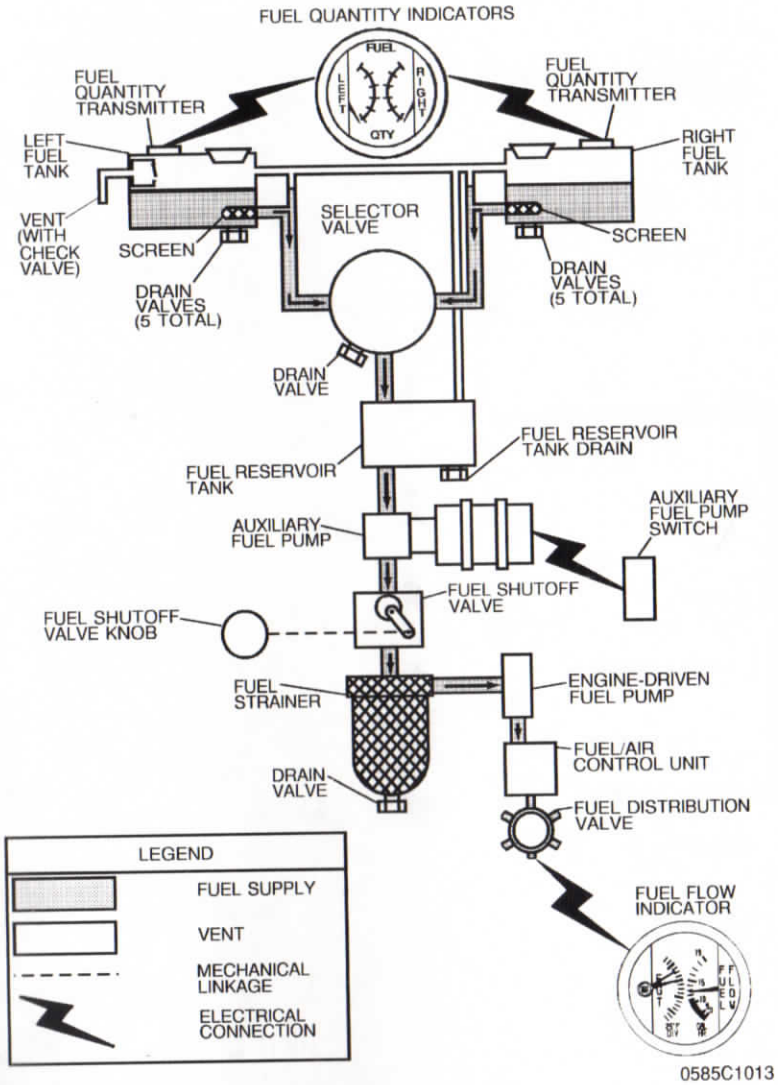

Figure 7-6. Fuel System Schematic
(Sheet 1 of 2)
172S8001 thru 172S9490

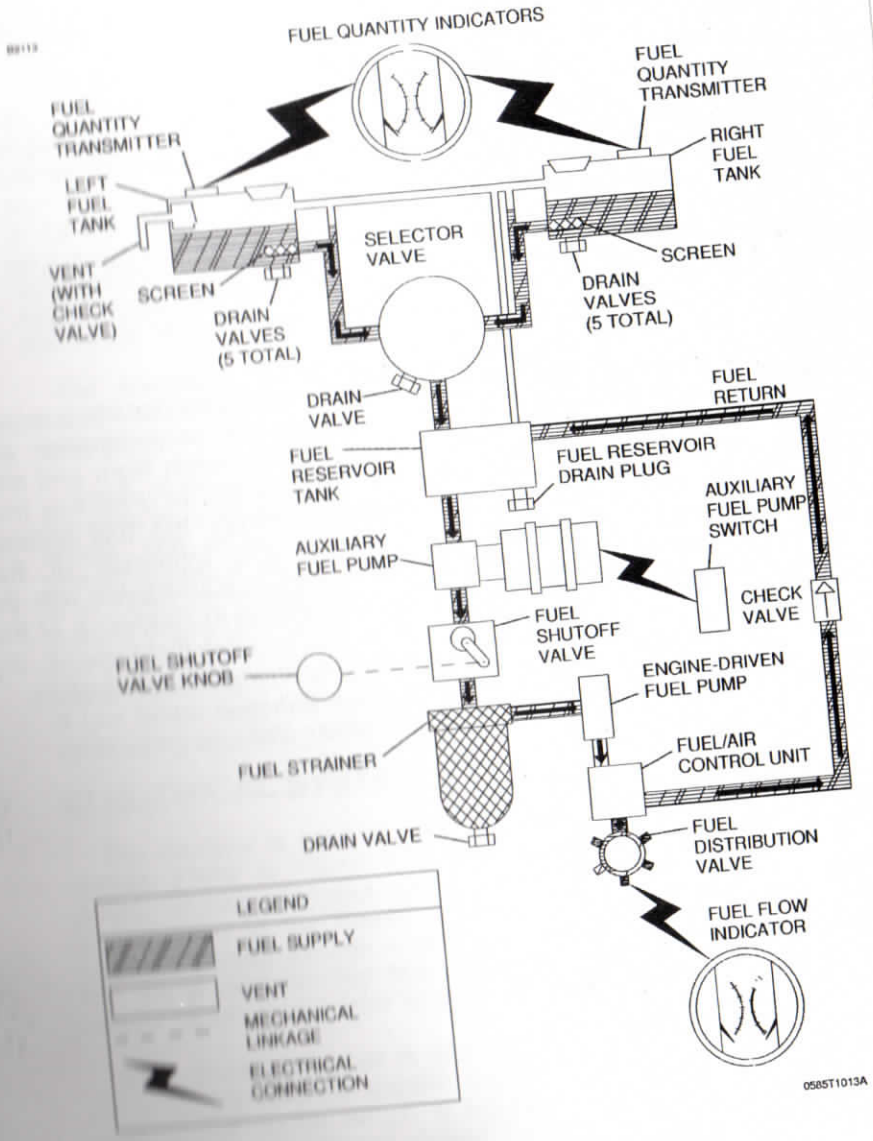

Figure 7-6. Fuel System Schematic
(Sheet 2 of 2)
172S9491 and On
And airplanes incorporating MK172-28-01.

NOTE

When the fuel tanks are 1/4 full or less, prolonged uncoordinated flight such as slips or skids can uncover the fuel tank outlets. Therefore, if operating with one fuel tank dry or if operating on LEFT or RIGHT tank when 1/4 full or less, do not allow the airplane to remain in uncoordinated flight for periods in excess of 30 seconds.

FUEL DRAIN VALVES

The fuel system is equipped with drain valves to provide a means for the examination of fuel in the system for contamination and grade. The system should be examined before each flight and after each refueling, by using the sampler cup provided to drain fuel from each wing tank sump, the fuel reservoir sump, the fuel selector drain and the fuel strainer sump. If any evidence of fuel contamination is found, it must be eliminated in accordance with the Preflight Inspection checklist and the discussion in Section 8 of this publication. If takeoff weight limitations for the next flight permit, the fuel tanks should be filled after each flight to prevent condensation.

BRAKE SYSTEM

The airplane has a single-disc, hydraulically actuated brake on each main landing gear wheel. Each brake is connected, by a hydraulic line, to a master cylinder attached to each of the pilot's rudder pedals. The brakes are operated by applying pressure to the top of either the left (pilot's) or right (copilot's) set of rudder pedals, which are interconnected. When the airplane is parked, both main wheel brakes may be set by utilizing the parking brake which is operated by a handle under the left side of the instrument panel. To apply the parking brake, set the brakes with the rudder pedals, pull the handle aft, and rotate it 90° down.

For maximum brake life, keep the brake system properly maintained, and minimize brake usage during taxi operations and landings.

Some of the symptoms of impending brake failure are: gradual decrease in braking action after brake application, noisy or dragging brakes, soft or spongy pedals, and excessive travel and weak braking action. If any of these symptoms appear, the brake system is in need of immediate attention. If, during taxi or landing roll, braking action decreases, let up on the pedals and then reapply the brakes with heavy pressure. If the brakes become spongy or pedal travel increases, pumping the pedals should build braking pressure. If one brake becomes weak or fails, use the other brake sparingly while using opposite rudder, as required, to offset the good brake.

ELECTRICAL SYSTEM

The airplane is equipped with a 28-volt, direct current electrical system (Refer to Figure 7-7). The system is powered by a belt-driven, 60-amp alternator and a 24-volt battery, located on the left forward side of the firewall. Power is supplied to most general electrical circuits through a split primary bus bar, with an essential bus wired between the two primaries to provide power for the master switch, annunciator circuits and interior lighting.

Each primary bus bar is also connected to an avionics bus bar via a single avionics master switch. The primary buses are on anytime the master switch is turned on, and are not affected by starter or external power usage. The avionics buses are on when the master switch and avionics master switch are in the ON position.

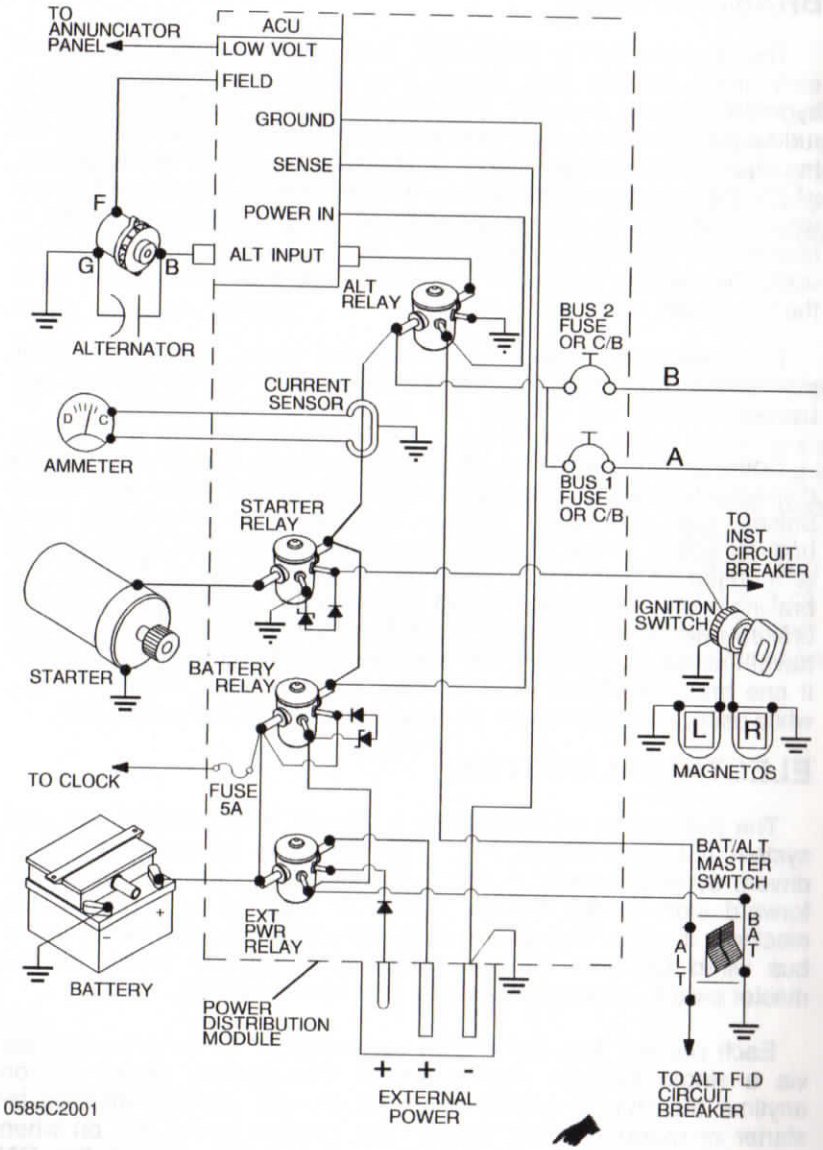

Figure 7-7. Electrical Schematic (Serials 172S8001 thru 172S8703)
(Sheet 1 of 2)

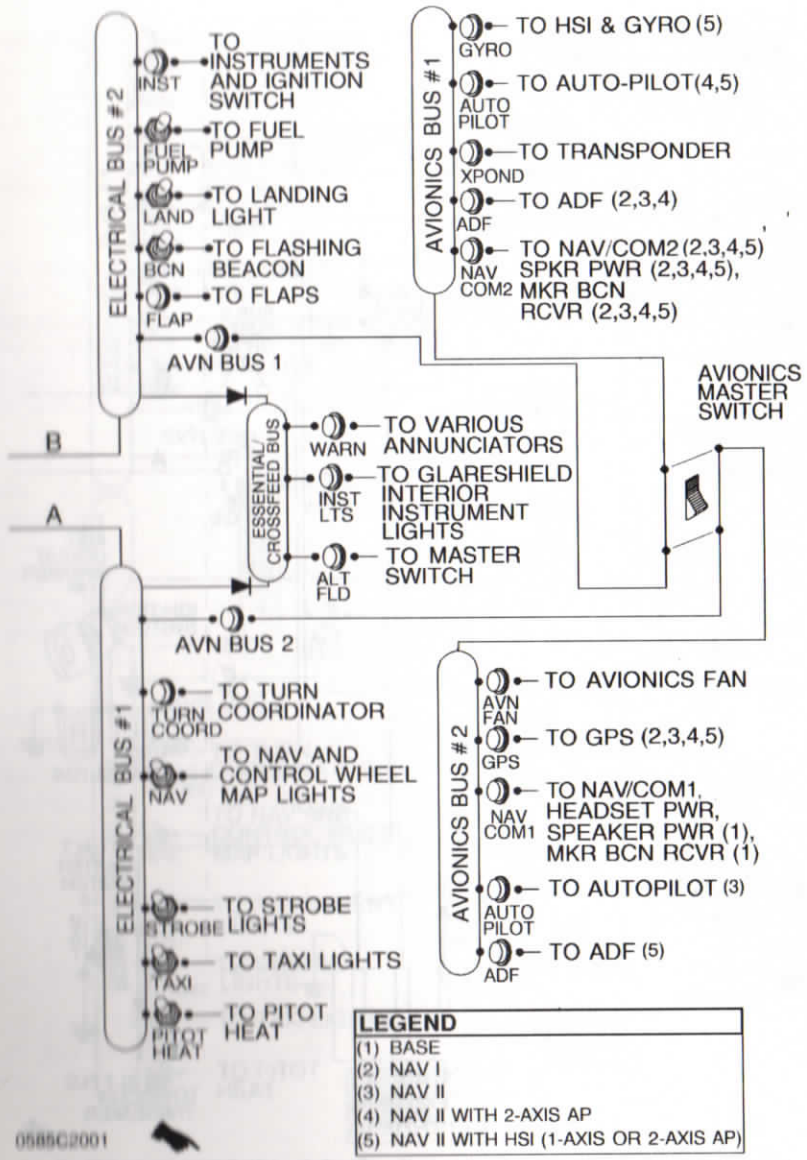

Figure 7-7. Electrical Schematic (Serials 172S8001 thru 172S8703)
(Sheet 2 of 2)

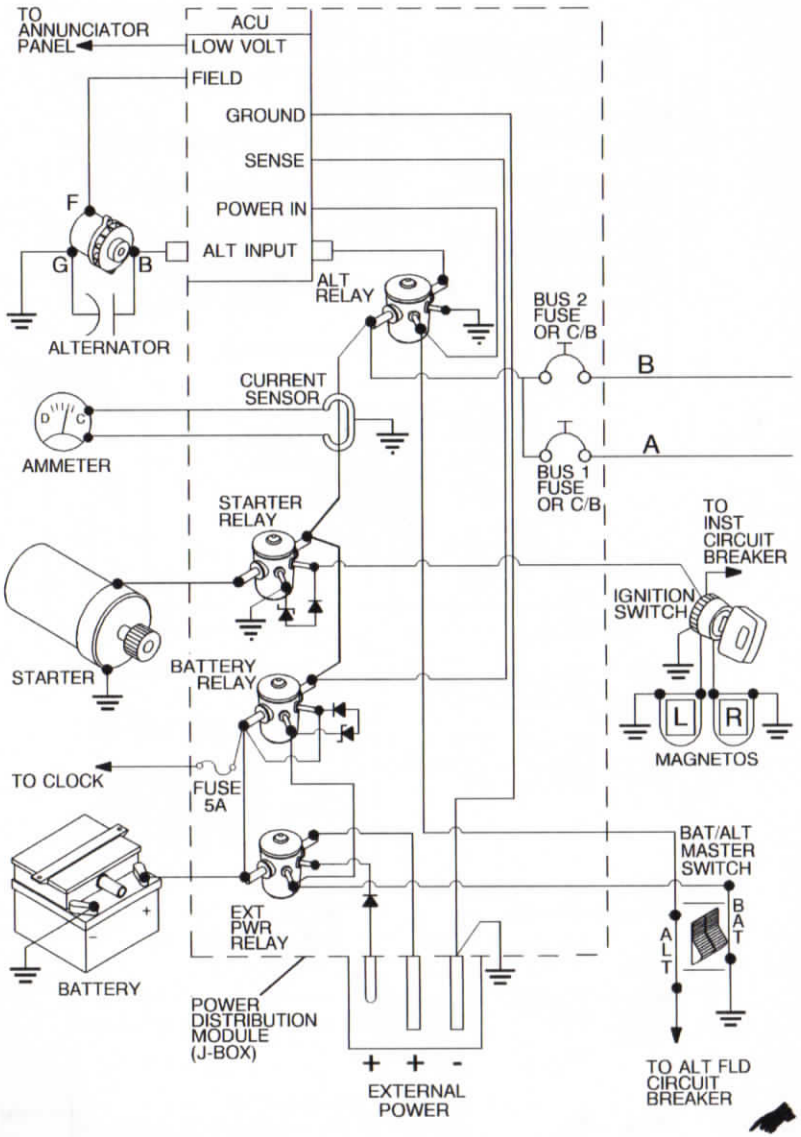

Figure 7-7A. Electrical Schematic (Serials 172S8704 and On)
(Sheet 1 of 2)

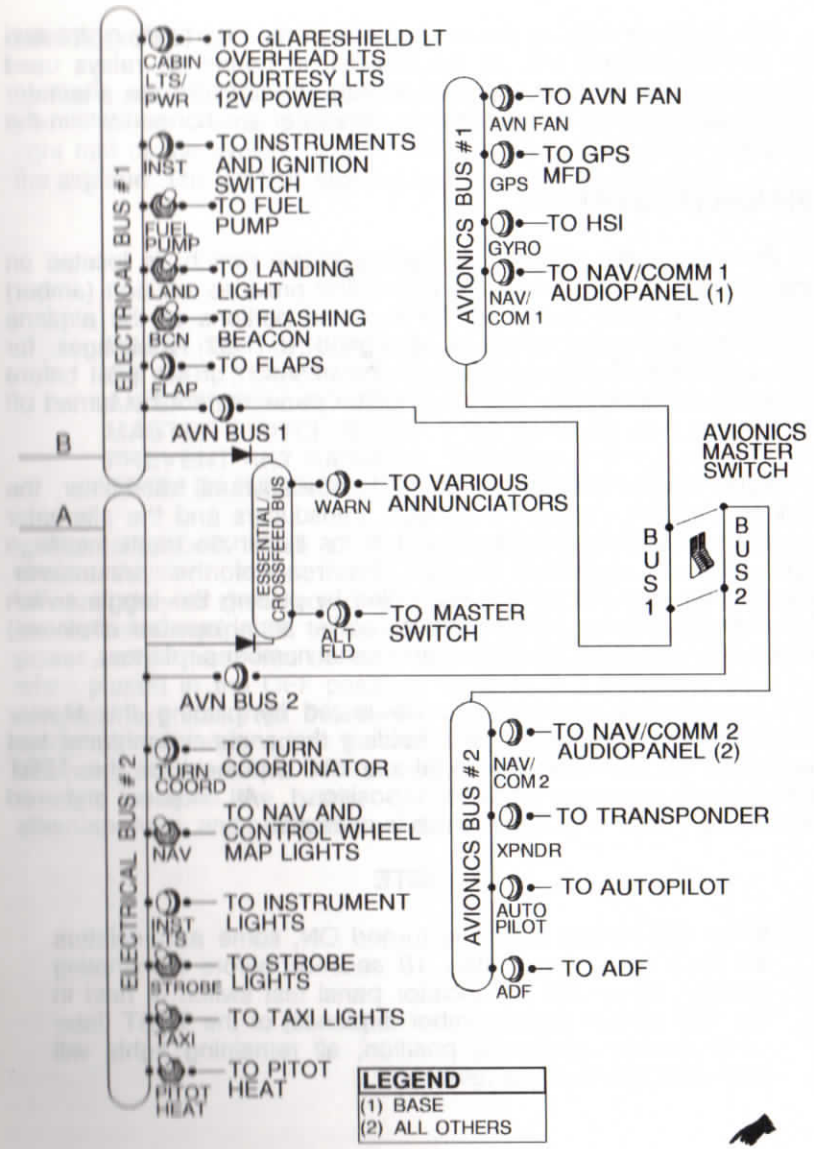

Figure 7-7A. Electrical Schematic (Serials 172S8704 and On)
(Sheet 2 of 2)

The airplane uses a power distribution module (J-Box), located on the left forward side of the firewall, to house all relays used throughout the airplane electrical system. In addition, the alternator control unit and the external power connector are housed within the module.

ANNUNCIATOR PANEL

An annunciator panel (with integral toggle switch) is located on the left side of the instrument panel and provides caution (amber) and warning (red) messages for selected portions of the airplane systems. The annunciator is designed to flash messages for approximately 10 seconds to gain the attention of the pilot before changing to steady on. The annunciator panel cannot be turned off by the pilot.

Inputs to the annunciator come from each fuel transmitter, the low oil pressure switch, the vacuum transducers and the alternator control unit (ACU). Individual LED bulbs illuminate each message and may be replaced through the rear of the annunciator. Illumination intensity can be controlled by placing the toggle switch in either the DIM or BRT positions (earlier serial number airplanes) or the DAY or NIGHT positions (later serial number airplanes).

The annunciator panel can be tested by placing the Master switch in the ON position and holding the annunciator panel test switch in the TST (earlier serial number airplanes) or the TEST (later serial number airplanes) position. All amber and red messages will flash until the switch is released.

NOTE

When the Master switch is turned ON, some annunciators will flash for approximately 10 seconds before illuminating steadily. When the annunciator panel test switch is held in the TST (earlier serial number airplanes) or the TEST (later serial number airplanes) position, all remaining lights will flash until the switch is released.

MASTER SWITCH

The master switch is a split-rocker type switch labeled MASTER, and is ON in the up position and OFF in the down position. The right half of the switch, labeled BAT, controls the battery power to the airplane. The left half, labeled ALT, controls the alternator.

⚠ CAUTION

PRIOR TO TURNING THE MASTER SWITCH ON OR OFF, STARTING THE ENGINE OR APPLYING AN EXTERNAL POWER SOURCE, THE AVIONICS MASTER SWITCH SHOULD BE TURNED OFF TO PREVENT ANY HARMFUL TRANSIENT VOLTAGE FROM DAMAGING THE AVIONICS EQUIPMENT.

Normally, both sides of the master switch should be used simultaneously; however, the BAT side of the switch could be turned on separately to check equipment while on the ground. To check or use avionics equipment or radios while on the ground, the avionics power switch must also be turned on. The ALT side of the switch, when placed in the OFF position, removes the alternator from the electrical system. With this switch in the OFF position, the entire electrical load is placed on the battery. Continued operation with the alternator switch in the OFF position will reduce battery power low enough to open the battery contactor, remove power from the alternator field, and prevent alternator restart.

AVIONICS MASTER SWITCH

Electrical power for each Avionics Bus is supplied from a primary Electrical Bus. For airplane serial numbers 172S8001 through 172S8703, except for certain non-U.S. certified airplanes, both Avionics Buses are controlled by a single-section rocker-type Avionics Master switch. At serial number 172S8704 and on, a two-section or "split" rocker-type Avionics Master switch controls power to each Avionics Bus independently. Placing the rocker in the up (ON) position provides power to the Avionics Bus. Placing the rocker in the down (OFF) position removes power from the Avionics Bus. The Avionics Master switch is located on the lower left side of the instrument panel.

NOTE

For airplane serial numbers 172S8001 through 172S8703, aircraft certified outside the United States can have a two-section or "split" Avionics Master switch. The two-section Avionics Master switch enables independent operation of Avionics Bus 1 and Avionics Bus 2.

With the Avionics Master rocker in the OFF position, no electrical power is provided to the avionics, even when the Master switch or the individual avionics component equipment switches are in their ON positions. The Avionics Master switch (both sides, if two-section) should be placed in the OFF position before switching the Master switch ON or OFF, starting the engine, or applying an external power source.

Each avionics bus also incorporates a separate circuit breaker installed between the primary bus and the avionics master switch. In the event of an electrical malfunction, this breaker will trip and take the effected avionics bus off-line.

AMMETER

The ammeter/vacuum gage is located on the lower left side of the instrument panel. It indicates the amount of current, in amperes, from the alternator to the battery or from the battery to the airplane electrical system. When the engine is operating and the master switch is turned on, the ammeter indicates the charging rate applied to the battery. In the event the alternator is not functioning or the electrical load exceeds the output of the alternator, the ammeter indicates the battery discharge rate.

LOW VOLTAGE ANNUNCIATION

The low voltage warning annunciator is incorporated in the annunciator panel and activates when voltage falls below 24.5 volts. If low voltage is detected, the red annunciation VOLTS will flash for approximately 10 seconds before illuminating steadily. The pilot cannot turn off the annunciator.

In the event an overvoltage condition occurs, the alternator control unit automatically opens the ALT FLD circuit breaker, removing alternator field current and shutting off the alternator. The battery will then supply system current as shown by a discharge rate on the ammeter. Under these conditions, depending on electrical system load, the low voltage warning annunciator will illuminate when system voltage drops below normal. The alternator control unit may be reset by resetting the circuit breaker. If the low voltage warning annunciator extinguishes, normal alternator charging has resumed; however, if the annunciator illuminates again, a malfunction has occurred, and the flight should be terminated as soon as practicable.

NOTE

Illumination of the low voltage annunciator and ammeter discharge indications may occur during low RPM conditions with an electrical load on the system, such as during a low RPM taxi. Under these conditions, the light will go out at higher RPM.

CIRCUIT BREAKERS AND FUSES

All circuit breakers inside the airplane are of the "push to reset" or "switch/breaker" type. The power distribution module uses spade type (automotive style) fuses and one glass type fuse (controlling the clock).

Spare fuses for the power distribution module are located inside the module. If one of the spare fuses is used, a replacement spare should be obtained and reinstalled before the next flight.

EXTERNAL POWER RECEPTACLE

An external power receptacle is integral to the power distribution module and allows the use of an external electrical power source for cold weather starting, and during lengthy maintenance work on electrical and avionics equipment. The receptacle is located on the left side of the engine cowling, just forward of the firewall and midway up the side. Access to the receptacle is gained by removing the cover plate (earlier serial number airplanes) or opening the hinged access door (later serial number airplanes).

The power distribution module (J-Box) incorporates a circuit which will close the battery contactor when external power is applied through the ground service plug receptacle with the master switch turned on. This feature is intended as a servicing aid when battery power is too low to close the contactor, and should not be used to avoid performing proper maintenance procedures on a low battery.

NOTE

- If no avionics equipment is to be used or serviced, the avionics master switch should be in the OFF position. If maintenance is required on the avionics equipment, use a regulated external power source to prevent damage to the avionics equipment by transient voltage. Do not crank or start the engine with the avionics master switch in the ON position.
- Before connecting an external power source (generator type or battery cart), the avionics master switch and the master switch should be turned off.

LIGHTING SYSTEMS

EXTERIOR LIGHTING

Exterior lighting consists of navigation lights on the wing tips and top of the rudder, a dual landing/taxi light configuration located in the left wing leading edge, a flashing beacon mounted on top of the vertical fin, and a strobe light on each wing tip. In addition, two courtesy lights are recessed into the lower surface of each wing and provide illumination for each cabin door area.

The exterior courtesy lights (and the rear cabin dome light) are turned on by pressing the rear cabin light switch. Pressing the rear cabin light switch again will extinguish the three lights. The remaining exterior lights are operated by breaker/switches located on the lower left instrument panel. To activate these lights, place switch in the UP position. To deactivate light, place in the DOWN position.

NOTE

The strobes and flashing beacon should not be used when flying through clouds or overcast; the flashing light reflected from water droplets or particles in the atmosphere, particularly at night, can produce vertigo and loss of orientation.

INTERIOR LIGHTING

Interior lighting is controlled by a combination of flood lighting, glareshield lighting, pedestal lighting, panel lighting, radio lighting and pilot control wheel lighting.

Flood lighting is accomplished using two lights in the front and a single dome light in the rear. All flood lights are contained in the overhead console, and are turned on and off with push type switches located near each light. The two front lights are individually rotatable, providing directional lighting for the pilot and front passenger. The rear dome light is a fixed position light and provides for general illumination in the rear cabin area.

Glareshield lighting is provided by either a fluorescent light or a series of LED lights recessed into the lower surface of the glareshield. This light is controlled by rotating the GLARESHIELD LT dimmer, located below the nav indicators. Rotating the dimmer clockwise increases light intensity, and rotating the dimmer counterclockwise decrease light intensity.

Pedestal lighting consists of a single, hooded light located above the fuel selector.This light is controlled by rotating the PEDESTAL LT dimmer, located below the nav indicators. Rotating the dimmer clockwise increases light intensity, and rotating the dimmer counterclockwise decreases light intensity.

Panel lighting is accomplished using individual lights mounted in each instrument and gauge. These lights are wired in parallel and are controlled by the PANEL LT dimmer, located below the nav indicators. Rotating the dimmer clockwise increases light intensity, and rotating the dimmer counterclockwise decreases light intensity.

Pilot control wheel lighting is accomplished by use of a rheostat and light assembly, located underneath the pilot control wheel. The light provides downward illumination from the bottom of the control wheel to the pilot's lap area. To operate the light, first turn on the NAV light switch, then adjust the map light intensity with the knurled rheostat knob. Rotating the dimmer clockwise increases light intensity, and rotating the dimmer counterclockwise decreases light intensity.

In addition to the RADIO LT dimmer, lighting intensity for the avionics displays and the NAV indicators (pilot's panel) is controlled by the annunciator panel test switch. When the switch is in the BRT position (earlier serial number airplanes) or the DAY position (later serial number airplanes), this lighting may be off regardless of the RADIO LT dimmer position.

Regardless of the light system in question, the most probable cause of a light failure is a burned out bulb. However, in the event any of the lighting systems fail to illuminate when turned on, check the appropriate circuit breaker. If the circuit breaker has opened, and there is no obvious indication of a short circuit (smoke or odor), turn off the light switch of the affected light, reset the breaker, and turn the switch on again. If the breaker opens again, do not reset it.

CABIN HEATING, VENTILATING AND DEFROSTING SYSTEM

The temperature and volume of airflow into the cabin can be regulated by manipulation of the push-pull CABIN HT and CABIN AIR controls (Refer to Figure 7-8). Both controls are the double-button locking type and permit intermediate settings.

For cabin ventilation, pull the CABIN AIR knob out. To raise the air temperature, pull the CABIN HT knob out approximately 1/4 to 1/2 inch for a small amount of cabin heat. Additional heat is available by pulling the knob out farther; maximum heat is available with the CABIN HT knob pulled out and the CABIN AIR knob pushed full in. When no heat is desired in the cabin, the CABIN HT knob is pushed full in.

Front cabin heat and ventilating air is supplied by outlet holes spaced across a cabin manifold just forward of the pilot's and copilot's feet. Rear cabin heat and air is supplied by two ducts from the manifold, one extending down each side of the cabin to an outlet just aft of the rudder pedals at floor level. Windshield defrost air is also supplied by two ducts leading from the cabin manifold to defroster outlets near the lower edge of the windshield. Two knobs control sliding valves in either defroster outlet to permit regulation of defroster airflow.

Separate adjustable ventilators supply additional air; one near each upper corner of the windshield supplies air for the pilot and copilot, and two ventilators are available for the rear cabin area to supply air to the rear seat passengers. There are additional ventilators located in various positions in the cockpit.

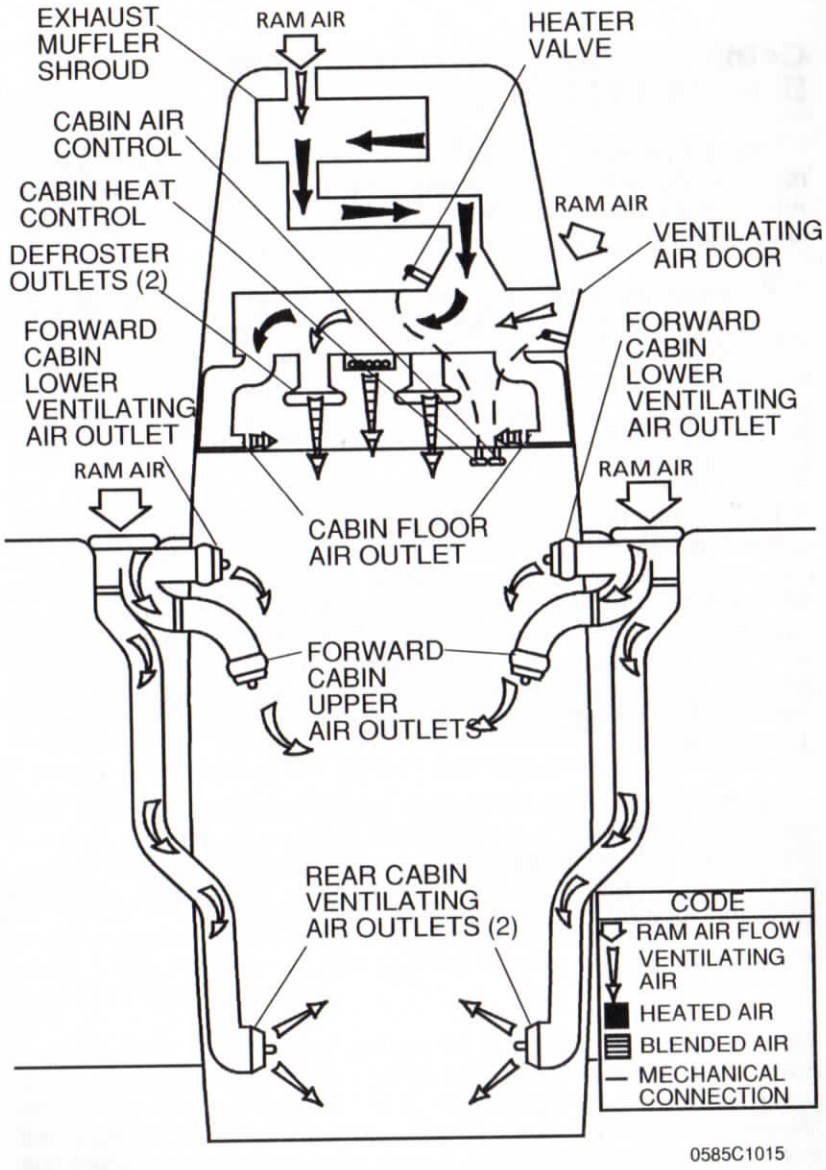

Figure 7-8. Cabin Heating, Ventilating and Defrosting System.

PITOT-STATIC SYSTEM AND INSTRUMENTS

The pitot-static system supplies ram air pressure to the airspeed indicator and static pressure to the airspeed indicator, vertical speed indicator and altimeter. The system is composed of a heated pitot tube mounted on the lower surface of the left wing, an external static port on the lower left side of the forward fuselage, and the associated plumbing necessary to connect the instruments to the sources.

The heated pitot system consists of a heating element in the pitot tube, a 5-amp switch/breaker labeled PITOT HEAT, and associated wiring. The switch/breaker is located on the lower left side of the instrument panel. When the pitot heat switch is turned on, the element in the pitot tube is heated electrically to maintain proper operation in possible icing conditions.

A static pressure alternate source valve is installed below the throttle, and can be used if the external static source is malfunctioning. This valve supplies static pressure from inside the cabin instead of the external static port.

If erroneous instrument readings are suspected due to water or ice in the pressure line going to the standard external static pressure source, the alternate static source valve should be pulled on.

Pressures within the cabin will vary with open heater/vents and windows. Refer to Section 5 for the effect of varying cabin pressures on airspeed readings.

AIRSPEED INDICATOR

The airspeed indicator is calibrated in knots. It incorporates a true airspeed window which allows true airspeed to be read off the face of the dial. In addition, the indicator incorporates a window at the twelve o'clock position which displays pressure altitude overlayed with a temperature scale.

Limitation and range markings (in KIAS) include the white arc (40 to 85 knots), green arc (48 to 129 knots), yellow arc (129 to 163 knots), and a red line (163 knots).

To find true airspeed, first determine pressure altitude and outside air temperature. Using this data, rotate the lower left knob until pressure altitude aligns with outside air temperature in the twelve o'clock window. True airspeed (corrected for pressure and temperature) can now be read in the lower window.

VERTICAL SPEED INDICATOR

The vertical speed indicator depicts airplane rate of climb or descent in feet per minute. The pointer is actuated by atmospheric pressure changes resulting from changes of altitude as supplied by the static source.

ALTIMETER

Airplane altitude is depicted by a barometric type altimeter. A knob near the lower left portion of the indicator provides adjustment of the instrument's barometric scale to the current altimeter setting.

VACUUM SYSTEM AND INSTRUMENTS

The vacuum system (Refer to Figure 7-9) provides suction necessary to operate the attitude indicator and the directional indicator. The system consists of two engine-driven vacuum pumps, two pressure switches for measuring vacuum available through each pump, a vacuum relief valve, a vacuum system air filter, vacuum operated instruments, a vacuum gauge, low vacuum warning on the annunciator, and a manifold with check valves to allow for normal vacuum system operation if one of the vacuum pumps should fail.

ATTITUDE INDICATOR

The attitude indicator is a vacuum air-driven gyro that gives a visual indication of flight attitude. Bank attitude is presented by a pointer at the top of the indicator relative to the bank scale which has index marks at 10°, 20°, 30°, 60°, and 90° either side of the center mark. Pitch and roll attitudes are presented by a miniature airplane superimposed over a symbolic horizon area divided into two sections by a white horizon bar. The upper "blue sky" area and the lower "ground" area have pitch reference lines useful for pitch attitude control. A knob at the bottom of the instrument is provided for in-flight adjustment of the symbolic airplane to the horizon bar for a more accurate flight attitude indication.

DIRECTIONAL INDICATOR

A directional indicator is a vacuum air-driven gyro that displays airplane heading on a compass card in relation to a fixed simulated airplane image and index. The indicator will precess slightly over a period of time. Therefore, the compass card should be set with the magnetic compass just prior to takeoff, and readjusted as required throughout the flight. A knob on the lower left edge of the instrument is used to adjust the compass card to correct for precession. A knob on the lower right edge of the instrument is used to move the heading bug.

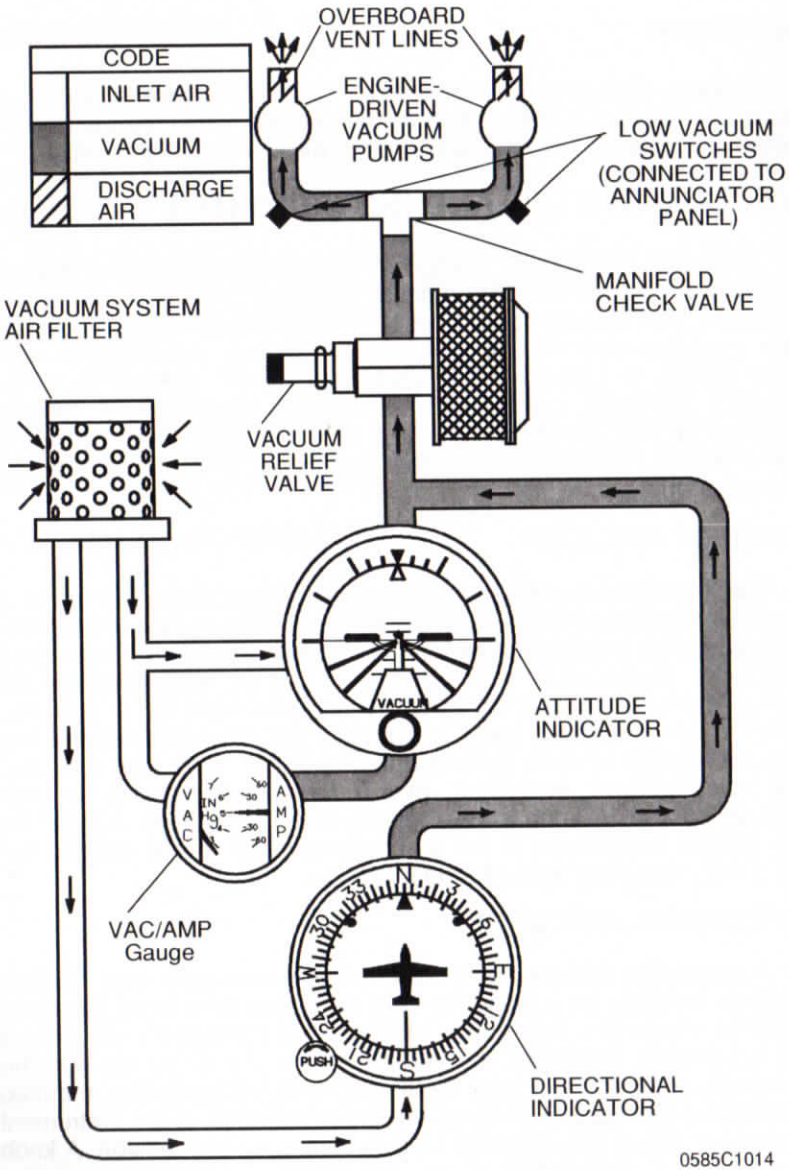

Figure 7-9. Vacuum System

VACUUM GAGE

The vacuum gage is part of the vacuum gage/ammeter, located on the lower left corner of the instrument panel. It is calibrated in inches of mercury and indicates vacuum air available for operation of the attitude and directional indicators. The desired suction range is 4.5 to 5.5 inches of mercury. Normally, a vacuum reading out of this range may indicate a system malfunction or improper adjustment, and in this case, the attitude and directional (heading) indicators should not be considered reliable. However, due to lower atmospheric pressures at higher altitudes, the vacuum gage may indicate as low as 4.0 in. Hg. at 20,000 feet and still be adequate for normal system operation.

LOW VACUUM ANNUNCIATION

Each engine-driven vacuum pump is plumbed to a common manifold, located forward of the firewall. From the tee, a single line runs into the cabin to operate the various vacuum system instruments. This tee contains check valves to prevent back flow into a pump if it fails. Transducers are located just upstream of the tee and measure vacuum output of each pump.

If output of the left pump falls below 3.0 in. Hg., the amber L VAC message will flash on the annunciator panel for approximately 10 seconds before turning steady on. If output of the right pump falls below 3.0 in. Hg., the amber VAC R message will flash on the annunciator panel for approximately 10 seconds before turning steady on. If output of both pumps falls below 3.0 in. Hg., the amber L VAC R message will flash on the annunciator panel for approximately 10 seconds before turning steady on.

CLOCK / O.A.T. INDICATOR

An integrated clock / O.A.T. / voltmeter is installed in the upper left side of the instrument panel as standard equipment. For a complete description and operating instructions, refer to the Supplements, Section 9.

STALL WARNING SYSTEM

The airplane is equipped with a pneumatic type stall warning system consisting of an inlet in the leading edge of the left wing, an air-operated horn near the upper left corner of the windshield, and associated plumbing. As the airplane approaches a stall, the low pressure on the upper surface of the wings moves forward around the leading edge of the wings. This low pressure creates a differential pressure in the stall warning system which draws air through the warning horn, resulting in an audible warning at 5 to 10 knots above stall in all flight conditions.

STANDARD AVIONICS

Standard avionics for the Model 172S airplanes include the following equipment:

KX-155A	Nav/Com Radio with KI 208 or KI 209A Indicator Head
KT-76C	Transponder
KMA-26	Audio Panel
3000-11	Emergency Locator Transmitter (ELT)

For complete operating instructions on the standard and optional avionics systems, refer to the Supplements, Section 9.

AVIONICS SUPPORT EQUIPMENT

Avionics operations are supported by the avionics cooling fan, microphone and headset installations and static discharge wicks.

AVIONICS COOLING FAN

An avionics cooling fan is installed on the left side of the interior firewall. The system utilizes a single electric fan and associated ductwork to force-cool the center stack radios.

Power to the electric fan is supplied through the AVN FAN circuit breaker. The fan operates whenever the Master and Avionics Master switches are both ON.

MICROPHONE AND HEADSET INSTALLATIONS

Standard equipment for the airplane includes a hand-held microphone, an overhead speaker, two remote-keyed microphone switches on the control wheels, and provisions for boom mic/headsets at each pilot and passenger station.

The hand-held microphone contains an integral push-to-talk switch. This microphone is plugged into the center pedestal and is accessible to both the pilot and front passenger. Depressing the push-to-talk switch allows audio transmission on the Com radios.

The overhead speaker is located in the center overhead console. Volume and output for this speaker is controlled through the audio panel.

Each control wheel contains a miniature push-to-talk switch. This switch allows the pilot or front passenger to transmit on the Com radios using remote mics.

Each station of the airplane is wired for aviation-style headsets. Mic and headphone jacks are located on each respective arm rest and allow for communications between passengers and pilot. The system is wired so that microphones are all voice-activated. Additional wiring provisions inside the audio panel ensure that only the pilot or front passenger can transmit through the com radios.

NOTE

To ensure audibility and clarity when transmitting with the handheld microphone, always hold it as closely as possible to the lips, then key the microphone and speak directly into it. Avoid covering opening on back side of microphone for optimum noise canceling.

STATIC DISCHARGERS

Static wicks (static dischargers) are installed at various points throughout the airframe to reduce interference from precipitation static. Under some severe static conditions, loss of radio signals is possible even with static dischargers installed. Whenever possible, avoid known severe precipitation areas to prevent loss of dependable radio signals. If avoidance is impractical, minimize airspeed and anticipate temporary loss of radio signals while in these areas.

Static dischargers lose their effectiveness with age, and therefore, should be checked periodically (at least at every annual inspection) by qualified avionics technicians, etc.

CABIN FEATURES

EMERGENCY LOCATOR TRANSMITTER (ELT)

A remote switch/annunciator is installed on the top center location of the copilot's instrument panel for control of the ELT from the flight crew station. The annunciator, which is in the center of the rocker switch, illuminates when the ELT transmitter is transmitting. The ELT emits an omni-directional signal on the international distress frequencies of 121.5 MHz and 243.0 MHz. General aviation and commercial aircraft, the FAA and CAP monitor 121.5 MHz, and 243.0 MHz is monitored by the military. For a basic overview of the ELT, refer to the Supplements, Section 9.

CABIN FIRE EXTINGUISHER

A portable Halon 1211 (Bromochlorodifluoromethane) fire extinguisher is standard and is installed on the floorboard near the pilot's seat where it would be accessible in case of fire. The extinguisher has an Underwriters Laboratories classification of 5-B:C. If installed, the extinguisher should be checked prior to each flight to ensure that its bottle pressure, as indicated by the gauge on the bottle, is within the green arc (approximately 125 psi) and the operating lever lock pin is securely in place.

To operate the fire extinguisher:

1. Loosen retaining clamp(s) and remove extinguisher from bracket.
2. Hold extinguisher upright, pull operating ring pin, and press lever while directing the discharge at the base of the fire at the near edge. Progress toward the back of the fire by moving the nozzle rapidly with a side to side sweeping motion.

⚠ WARNING

VENTILATE THE CABIN PROMPTLY AFTER SUCCESSFULLY EXTINGUISHING THE FIRE TO REDUCE THE GASES PRODUCED BY THERMAL DECOMPOSITION.

3. Anticipate approximately eight seconds of discharge duration.

Fire extinguishers should be recharged by a qualified fire extinguisher agency after each use. Such agencies are listed under "Fire Extinguisher" in the telephone directory. After recharging, secure the extinguisher to its mounting bracket; do not allow it to lie loose on shelves or seats.

SECTION 8

AIRPLANE HANDLING, SERVICE & MAINTENANCE

TABLE OF CONTENTS

	Page
Introduction	8-3
Identification Plate	8-4
Cessna Owner Advisories	8-4
United States Airplane Owners	8-5
International Airplane Owners	8-5
Publications	8-5
Airplane File	8-6
Airplane Inspection Periods	8-7
FAA Required Inspections	8-7
Cessna Inspection Programs	8-8
Cessna Customer Care Program	8-9
Pilot Conducted Preventive Maintenance	8-9
Alterations Or Repairs	8-10
Ground Handling	8-10
Towing	8-10
Parking	8-11
Tie-Down	8-11
Jacking	8-11
Leveling	8-12
Flyable Storage	8-12
Servicing	8-13
Oil	8-14
Oil Specification	8-14
Recommended Viscosity for Temperature Range	8-14

TABLE OF CONTENTS (Continued)

	Page
Capacity of Engine Sump	8-15
Oil and Oil Filter Change	8-15
Fuel	8-16
Approved Fuel Grades (and Colors)	8-16
Fuel Capacity	8-16
Fuel Additives	8-16
Fuel Contamination	8-20
Landing Gear	8-21
Cleaning And Care	8-21
Windshield And Windows	8-21
Painted Surfaces	8-22
Propeller Care	8-23
Engine Care	8-23
Interior Care	8-24

INTRODUCTION

This section contains factory recommended procedures for proper ground handling and routine care and servicing of your airplane. It also identifies certain inspection and maintenance requirements which must be followed if your airplane is to retain that new airplane performance and dependability. It is important to follow a planned schedule of lubrication and preventive maintenance based on climatic and flying conditions encountered in your local area.

Keep in touch with your local Cessna Service Station and take advantage of their knowledge and experience. Your Cessna Service Station knows your airplane and how to maintain it, and will remind you when lubrications and oil changes are necessary, as well as other seasonal and periodic services.

The airplane should be regularly inspected and maintained in accordance with information found in the airplane maintenance manual and in company issued service bulletins and service newsletters. All service bulletins pertaining to the aircraft by serial number should be accomplished and the airplane should receive repetitive and required inspections. Cessna does not condone modifications, whether by Supplemental Type Certificate or otherwise, unless these certificates are held and/or approved by Cessna. Other modifications may void warranties on the airplane since Cessna has no way of knowing the full effect on the overall airplane. Operation of an airplane that has been modified may be a risk to the occupants, and operating procedures and performance data set forth in the operating handbook may no longer be considered accurate for the modified airplane.

IDENTIFICATION PLATE

All correspondence regarding your airplane should include the Serial Number. The Serial Number, Model Number, Production Certificate Number (PC) and Type Certificate Number (TC) can be found on the Identification Plate, located on the aft left tailcone. A secondary Identification Plate is installed on the lower part of the left forward doorpost on earlier serial number airplanes. The Finish and Trim Plate, located on the lower part of the left forward doorpost, contains a code describing the exterior paint configuration for the airplane. The code may be used in conjunction with an applicable Illustrated Parts Catalog if finish and trim information is needed.

CESSNA OWNER ADVISORIES

Cessna Owner Advisories are sent to Cessna Aircraft FAA Registered owners of record at no charge to inform them about mandatory and/or beneficial aircraft service requirements and product changes. Copies of the service bulletins are available from Cessna Service Stations and Cessna Customer Service.

UNITED STATES AIRPLANE OWNERS

If your airplane is registered in the U. S., appropriate Cessna Owner Advisories will be mailed to you automatically according to the latest aircraft registration name and address which you have provided to the FAA. Therefore, it is important that you provide correct and up-to-date mailing information to the FAA.

If you require a duplicate Owner Advisory to be sent to an address different from the FAA aircraft registration address, please complete and return an Owner Advisory Application (otherwise no action is required on your part).

INTERNATIONAL AIRPLANE OWNERS

To receive Cessna Owner Advisories, please complete and return an Owner Advisory Application.

Receipt of a valid Owner Advisory Application will establish your Cessna Owner Advisory service for one year, after which you will be sent a renewal notice. It is important that you respond promptly to update your address for this critical service.

PUBLICATIONS

Various publications and flight operation aids are furnished in the airplane when delivered from the factory. These items are listed below.

- Customer Care Program Handbook
- Pilot's Operating Handbook and FAA Approved Airplane Flight Manual
- Pilot's Checklist
- Passenger Briefing Card
- Cessna Sales and Service Directory

To obtain additional publications or Owner Advisory information, you may contact Cessna's Product Support Department at (316) 517-5800. Fax (316) 942-9006 or write to The Cessna Aircraft Company, P.O. Box 7706, Wichita, KS 67277, Dept 751C.

The following additional publications, plus many other supplies that are applicable to your airplane, are available from your local Cessna Service Station.

- Information Manual (contains Pilot's Operating Handbook Information)
- Maintenance Manual, Wiring Diagram Manual and Illustrated Parts Catalog

Your local Cessna Service Station has a Customer Care Supplies and Publications Catalog covering all available items, many of which the Service Station keeps on hand. The Service Station can place an order for any item which is not in stock.

NOTE

A Pilot's Operating Handbook and FAA Approved Airplane Flight Manual which is lost or destroyed may be replaced by contacting your local Cessna Service Station. An affidavit containing the owner's name, airplane serial number and reason for replacement must be included in replacement requests since the Pilot's Operating Handbook and FAA Approved Airplane Flight Manual is identified for specific serial numbered airplanes only.

AIRPLANE FILE

There are miscellaneous data, information and licenses that are a part of the airplane file. The following is a checklist for that file. In addition, a periodic check should be made of the latest Federal Aviation Regulations to ensure that all data requirements are met.

To be displayed in the airplane at all times:

1. Aircraft Airworthiness Certificate (FAA Form 8100-2).
2. Aircraft Registration Certificate (FAA Form 8050-3).
3. Aircraft Radio Station License (if applicable).

To be carried in the airplane at all times:

1. Current Pilot's Operating Handbook and FAA Approved Airplane Flight Manual.
2. Weight and Balance, and associated papers (latest copy of the Repair and Alteration Form, FAA Form 337, if applicable).
3. Equipment List.

To be made available upon request:

1. Airplane Logbook.
2. Engine Logbook.

Most of the items listed are required by the United States Federal Aviation Regulations. Since the Regulations of other nations may require other documents and data, owners of airplanes not registered in the United States should check with their own aviation officials to determine their individual requirements.

Cessna recommends that these items, plus the Pilot's Checklists, Customer Care Program Handbook and Customer Care Card, be carried in the airplane at all times.

AIRPLANE INSPECTION PERIODS

FAA REQUIRED INSPECTIONS

As required by U.S. Federal Aviation Regulations, all civil aircraft of U.S. registry must undergo a complete inspection (annual) each twelve calendar months. In addition to the required annual inspection, aircraft operated commercially (for hire) must have a complete inspection every 100 hours of operation.

The FAA may require other inspections by the issuance of airworthiness directives applicable to the airplane, engine, propeller and components. It is the responsibility of the owner/operator to ensure compliance with all applicable airworthiness directives, and when the inspections are repetitive, to take appropriate steps to prevent inadvertent noncompliance.

CESSNA INSPECTION PROGRAMS

In lieu of the 100 hour and annual inspection requirements, an airplane may be inspected in accordance with a Progressive Care Inspection Program or a PhaseCard Inspection Program. Both programs offer systems which allow the work load to be divided into smaller operations that can be accomplished in shorter time periods.

The Cessna Progressive Care Inspection Program allows an airplane to be inspected and maintained in four operations. The four operations are recycled each 200 hours and are recorded in a specially provided Aircraft Inspection Log as each operation is conducted.

The PhaseCard Inspection Program offers a parallel system for high-utilization flight operations (approximately 600 flight hours per year). This system utilizes 50 hour intervals (Phase 1 and Phase 2) to inspect high-usage systems and components. At 12 months or 600 flight hours, whichever occurs first, the airplane undergoes a complete (Phase 3) inspection.

Regardless of the inspection method selected, the owner should keep in mind that FAR Part 43 and FAR Part 91 establishes the requirement that properly certified agencies or personnel accomplish all required FAA inspections and most of the manufacturer recommended inspections.

CESSNA CUSTOMER CARE PROGRAM

Specific benefits and provisions of the Cessna Warranty plus other important benefits for you are contained in your Customer Care Program Handbook supplied with your airplane. The Customer Care Program Handbook should be thoroughly reviewed and kept in the airplane at all times.

You will also want to return to your Cessna Service Station either at 50 hours for your first Progressive Care Operation, or at 100 hours for your first 100 hour inspection depending on which program you choose to establish for your airplane. While these important inspections will be performed for you by any Cessna Service Station, in most cases you will prefer to have the Cessna Service Station from whom you purchased the airplane accomplish this work.

PILOT CONDUCTED PREVENTIVE MAINTENANCE

A certified pilot who owns or operates an airplane not used as an air carrier is authorized by FAR Part 43 to perform limited maintenance on his airplane. Refer to FAR Part 43 for a list of the specific maintenance operations which are allowed.

NOTE

Pilots operating airplanes of other than U.S. registry should refer to the regulations of the country of certification for information on preventive maintenance that may be performed by pilots.

A Maintenance Manual must be obtained prior to performing any preventive maintenance to ensure that proper procedures are followed. Your local Cessna Service Station should be contacted for further information or for required maintenance which must be accomplished by appropriately licensed personnel.

ALTERATIONS OR REPAIRS

It is essential that the FAA be contacted prior to any alterations on the airplane to ensure that airworthiness of the airplane is not violated. Alterations or repairs to the airplane must be accomplished by licensed personnel, utilizing only FAA Approved components and FAA Approved data, such as Cessna Service Bulletins.

GROUND HANDLING

TOWING

The airplane is most easily and safely maneuvered by hand with the tow bar attached to the nose wheel (the tow bar is stowed on the side of the baggage area). When towing with a vehicle, do not exceed the nose gear turning angle of 30° either side of center, or damage to the nose landing gear will result.

⚠ CAUTION

REMOVE ANY INSTALLED RUDDER LOCK BEFORE TOWING.

If the airplane is towed or pushed over a rough surface during hangaring, watch that the normal cushioning action of the nose strut does not cause excessive vertical movement of the tail and the resulting contact with low hangar doors or structure. A flat nose tire or deflated strut will also increase tail height.

PARKING

When parking the airplane, head into the wind and set the parking brake. Do not set the parking brake during cold weather when accumulated moisture may freeze the brakes, or when the brakes are overheated. Install the control wheel lock and chock the wheels. In severe weather and high wind conditions, tie the airplane down as outlined in the following paragraph.

TIE-DOWN

Proper tie-down procedure is the best precaution against damage to the parked airplane by gusty or strong winds. To tie-down the airplane securely, proceed as follows:

1. Set the parking brake and install the control wheel lock.
2. Install a surface control lock over the fin and rudder.
3. Tie sufficiently strong ropes or chains (700 pounds tensile strength) to the wing, tail and nose tie-down fittings and secure each rope or chain to a ramp tie-down.
4. Install a pitot tube cover.

JACKING

When a requirement exists to jack the entire airplane off the ground, or when wing jack points are used in the jacking operation, refer to the Maintenance Manual for specific procedures and equipment required.

Individual main gear may be jacked by using the jack pad which is incorporated in the main landing gear strut step bracket. When using the individual gear strut jack pad, flexibility of the gear strut will cause the main wheel to slide inboard as the wheel is raised, tilting the jack. The jack must then be lowered for a second jacking operation. Do not jack both main wheels simultaneously using the individual main gear jack pads.

⚠ CAUTION

DO NOT APPLY PRESSURE ON THE ELEVATOR OR HORIZONTAL STABILIZER SURFACES. WHEN PUSHING ON THE TAILCONE, ALWAYS APPLY PRESSURE AT A BULKHEAD TO AVOID BUCKLING THE SKIN.

If nose gear maintenance is required, the nose wheel may be raised off the ground by pressing down on a tailcone bulkhead, just forward of the horizontal stabilizer, and allowing the tail to rest on the tail tie-down ring.

To assist in raising and holding the nose wheel off the ground, ground anchors should be utilized at the tail tie down point.

NOTE

Ensure that the nose will be held off the ground under all conditions by means of suitable stands or supports under weight supporting bulkheads near the nose of the airplane.

LEVELING

Longitudinal leveling of the airplane is accomplished by placing a level on leveling screws located on the left side of the tailcone. Deflate the nose tire and/or lower or raise the nose strut to properly center the bubble in the level. Corresponding points on both upper door sills may be used to level the airplane laterally.

FLYABLE STORAGE

Airplanes placed in non operational storage for a maximum of 30 days or those which receive only intermittent operational use for the first 25 hours are considered in flyable storage status. Every seventh day during these periods, the propeller should be rotated by hand through five revolutions. This action "limbers" the oil and helps prevent any accumulation of corrosion on engine cylinder walls.

⚠ WARNING

FOR MAXIMUM SAFETY, CHECK THAT THE IGNITION SWITCH IS OFF, THE THROTTLE IS CLOSED, THE MIXTURE CONTROL IS IN THE IDLE CUT OFF POSITION, AND THE AIRPLANE IS SECURED BEFORE ROTATING THE PROPELLER BY HAND. DO NOT STAND WITHIN THE ARC OF THE PROPELLER BLADES WHILE TURNING THE PROPELLER.

After 30 days, the airplane should be flown for 30 minutes or a ground runup should be made just long enough to produce an oil temperature within the lower green arc range. Excessive ground runup should be avoided.

Engine runup also helps to eliminate excessive accumulations of water in the fuel system and other air spaces in the engine. Keep fuel tanks full to minimize condensation in the tanks. Keep the battery fully charged to prevent the electrolyte from freezing in cold weather. If the airplane is to be stored temporarily, or indefinitely, refer to the Maintenance Manual for proper storage procedures.

SERVICING

In addition to the Preflight Inspection covered in Section 4 of this handbook, complete servicing, inspection and test requirements for your airplane are detailed in the Maintenance Manual. The Maintenance Manual outlines all items which require attention at specific intervals plus those items which require servicing, inspection, and/or testing at special intervals.

Since Cessna Service Stations conduct all service, inspection, and test procedures in accordance with applicable Maintenance Manuals, it is recommended that you contact your local Cessna Service Station concerning these requirements and begin scheduling your airplane for service at the recommended intervals.

Cessna Progressive Care ensures that these requirements are accomplished at the required intervals to comply with the 100 hour or annual inspection as previously covered.

Depending on various flight operations, your local Government Aviation Agency may require additional service, inspections, or tests. For these regulatory requirements, owners should check with local aviation officials where the airplane is being operated.

For quick and ready reference, quantities, materials and specifications for frequently used service items are as follows.

OIL

OIL SPECIFICATION

MIL-L-6082 or SAE J1966 Aviation Grade Straight Mineral Oil: Used when the airplane was delivered from the factory and should be used to replenish the supply during the first 25 hours. This oil should be drained and filter replaced after the first 25 hours of operation. Refill the engine and continue to use until a total of 50 hours has accumulated or oil consumption has stabilized.

MIL-L-22851 or SAE J1899 Aviation Grade Ashless Dispersant Oil: Oil conforming to Textron Lycoming Service Instruction No. 1014, and all revision and supplements thereto, must be used after first 50 hours, or when oil consumption has stabilized.

RECOMMENDED VISCOSITY FOR TEMPERATURE RANGE

Multiviscosity or straight grade oil may be used throughout the year for engine lubrication. Refer to the following table for temperature verses viscosity ranges.

Temperature	MIL-L-6082 or SAE J1966 Straight Mineral Oil SAE Grade	MIL-L-22851 or SAE J1899 Ashless Dispersant SAE Grade
Above 27°C (80°F)	60	60
Above 16°C (60°F)	50	40 or 50
-1°C (30°F) to 32°C (90°F)	40	40
-18°C (0°F) to 21°C (70°F)	30	30, 40 or 20W-40
Below -12°C (10°F)	20	30 or 20W-30
-18°C (0°F) - 32°C (90°F)	20W-50	20W-50 or 15W-50
All Temperatures	---	15W-50 or 20W-50

CAPACITY OF ENGINE SUMP

The engine lubrication system has a total capacity of 9 quarts of oil, with the oil filter accounting for 1 quart of that total. The engine oil sump (crankcase) has a capacity of 8 quarts. The engine must not be operated with less than 5 quarts in the sump. For extended flights, the engine oil level should be at 8 quarts.

OIL AND OIL FILTER CHANGE

After the first 25 hours of operation, drain the engine oil sump and replace the filter. Refill sump with straight mineral oil and use until a total of 50 hours has accumulated or oil consumption has stabilized; then change to ashless dispersant oil. Ashless dispersant oil (and oil filter) should then be changed at time intervals set forth by the engine manufacturer.

NOTE

During the first 25 hour oil and filter change, a general inspection of the overall engine compartment is required. Items which are not normally checked during a preflight inspection should be given special attention. Hoses, metal lines and fittings should be inspected for signs of oil and fuel leaks, and checked for abrasions, chafing, security, proper routing and support, and evidence of deterioration. Inspect the intake and exhaust systems for cracks, evidence of leakage, and security of attachment. Engine controls and linkages should be checked for freedom of movement through their full range, security of attachment and evidence of wear. Inspect wiring for security, chafing, burning, defective insulation, loose or broken terminals, heat deterioration, and corroded terminals. Check the alternator belt in accordance with Maintenance Manual instructions, and retighten if necessary. A periodic check of these items during subsequent servicing operations is recommended.

FUEL

APPROVED FUEL GRADES (AND COLORS)

100LL Grade Aviation Fuel (Blue).
100 Grade Aviation Fuel (Green).

NOTE

Isopropyl alcohol or diethylene glycol monomethyl ether (DiEGME) may be added to the fuel supply in quantities not to exceed 1% (alcohol) or 0.15% (DiEGME) of total volume. Refer to Fuel Additives in later paragraphs for additional information.

FUEL CAPACITY

56.0 U.S. Gallons Total: 28.0 U.S. Gallons per tank.

NOTE

To ensure maximum fuel capacity when refueling and minimize cross feeding, the fuel selector valve should be placed in either the LEFT or RIGHT position and the airplane parked in a wings level, normal ground attitude. Refer to Figure 1-1 for a definition of normal ground attitude.

Service the fuel system after each flight, and keep fuel tanks full to minimize condensation in the tanks.

FUEL ADDITIVES

Strict adherence to recommended preflight draining instructions as called for in Section 4 will eliminate any free water accumulations from the tank sumps. While small amounts of water may still remain in solution in the gasoline, it will normally be consumed and go unnoticed in the operation of the engine.

One exception to this can be encountered when operating under the combined effect of: (1) use of certain fuels, with (2) high humidity conditions on the ground (3) followed by flight at high altitude and low temperature. Under these unusual conditions, small amounts of water in solution can precipitate from the fuel stream and freeze in sufficient quantities to induce partial icing of the engine fuel system.

While these conditions are quite rare and will not normally pose a problem to owners and operators, they do exist in certain areas of the world and consequently must be dealt with, when encountered.

Therefore, to help alleviate the possibility of fuel icing occurring under these unusual conditions, it is permissible to add isopropyl alcohol or diethylene glycol monomethyl ether (DiEGME) compound to the fuel supply.

The introduction of alcohol or DiEGME compound into the fuel provides two distinct effects: (1) it absorbs the dissolved water from the gasoline and (2) alcohol has a freezing temperature depressant effect.

NOTE

When using fuel additives, it must be remembered that the final goal is to obtain a correct fuel-to-additive ratio in the tank, and not just with fuel coming out of the refueling nozzle. For example, adding 15 gallons of correctly proportioned fuel to a tank which contains 20 gallons of untreated fuel will result in a lower-than-acceptable concentration level to the 35 gallons of fuel which now reside in the tank.

Alcohol, if used, is to be blended with the fuel in a concentration of 1% by volume. Concentrations greater than 1% are not recommended since they can be detrimental to fuel tank materials.

The manner in which the alcohol is added to the fuel is significant because alcohol is most effective when it is completely dissolved in the fuel. To ensure proper mixing, the following is recommended:

1. For best results, the alcohol should be added during the fueling operation by pouring the alcohol directly on the fuel stream issuing from the fueling nozzle.

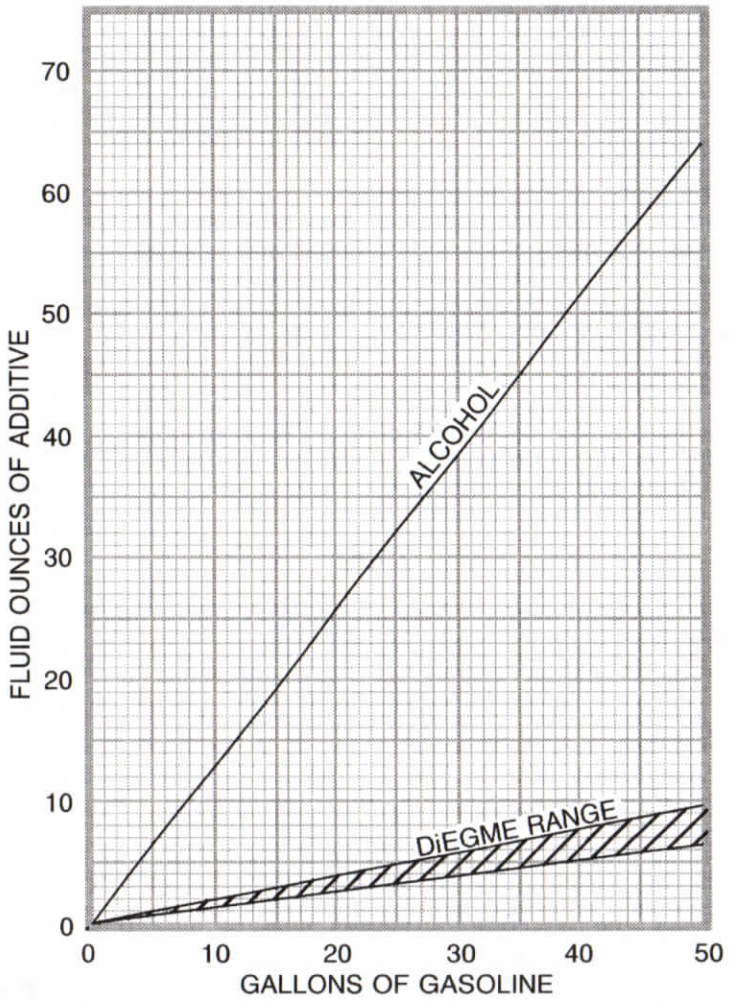

0585C1001

Figure 8-1. Fuel Mixing Ratio

2. An alternate method that may be used is to premix the complete alcohol dosage with some fuel in a separate clean container (approximately 2-3 gallon capacity) and then transferring this mixture to the tank prior to the fuel operation.

Diethylene glycol monomethyl ether (DiEGME) compound must be carefully mixed with the fuel in concentrations between 0.10% (minimum) and 0 .15% (maximum) of total fuel volume. Refer to Figure 8-1 for a DiEGME-to-fuel mixing chart.

⚠ CAUTION

ANTI-ICING ADDITIVE IS DANGEROUS TO HEALTH WHEN BREATHED AND/OR ABSORBED INTO THE SKIN.

⚠ CAUTION

MIXING OF DiEGME WITH FUEL IS EXTREMELY IMPORTANT. A CONCENTRATION IN EXCESS OF THAT RECOMMENDED (0.15% BY VOLUME MAXIMUM) MAY RESULT IN DETRIMENTAL EFFECTS TO THE FUEL TANK SEALANT, AND DAMAGE TO O-RINGS AND SEALS USED IN THE FUEL SYSTEM AND ENGINE COMPONENTS. A CONCENTRATION OF LESS THAN THAT RECOMMENDED (0.10% BY TOTAL VOLUME MINIMUM) WILL RESULT IN INEFFECTIVE TREATMENT. USE ONLY BLENDING EQUIPMENT THAT IS RECOMMENDED BY THE MANUFACTURER TO OBTAIN PROPER PROPORTIONING.

Prolonged storage of the airplane will result in a water buildup in the fuel which "leeches out" the additive. An indication of this is when an excessive amount of water accumulates in the fuel tank sumps. The concentration can be checked using a differential refractometer. It is imperative that the technical manual for the differential refractometer be followed explicitly when checking the additive concentration.

FUEL CONTAMINATION

Fuel contamination is usually the result of foreign material present in the fuel system, and may consist of water, rust, sand, dirt, microbes or bacterial growth. In addition, additives that are not compatible with fuel or fuel system components can cause the fuel to become contaminated.

Before each flight and after each refueling, use a clear sampler cup and drain at least a cupful of fuel from each fuel tank drain location and from the fuel strainer quick drain valve to determine if contaminants are present, and to ensure the airplane has been fueled with the proper grade of fuel.

If contamination is detected, drain **all** fuel drain points including the fuel reservoir and fuel selector quick drain valves and then gently rock the wings and lower the tail to the ground to move any additional contaminants to the sampling points. Take repeated samples from all fuel drain points until **all** contamination has been removed. If, after repeated sampling, evidence of contamination still exists, the airplane should not be flown. Tanks should be drained and system purged by qualified maintenance personnel. All evidence of contamination must be removed before further flight. If the airplane has been serviced with the improper fuel grade, defuel completely and refuel with the correct grade. Do not fly the airplane with contaminated or unapproved fuel.

In addition, Owners/Operators who are not acquainted with a particular fixed base operator should be assured that the fuel supply has been checked for contamination and is properly filtered before allowing the airplane to be serviced. Fuel tanks should be kept full between flights, provided weight and balance considerations will permit, to reduce the possibility of water condensing on the walls of partially filled tanks.

To further reduce the possibility of contaminated fuel, routine maintenance of the fuel system should be performed in accordance with the airplane Maintenance Manual. Only the proper fuel, as recommended in this handbook, should be used, and fuel additives should not be used unless approved by Cessna and the Federal Aviation Administration.

LANDING GEAR

Consult the following table for servicing information on the landing gear.

COMPONENT	SERVICING CRITERIA
Nose Wheel (5.00-5, 6-Ply Rated Tire)	45.0 PSI
Main Wheel (6.00-6, 6-Ply Rated Tire)	38.0 PSI
Brakes	MIL-H-5606
Nose Gear Shock Strut	MIL-H-5606; 45.0 PSI *

* Keep strut filled with MIL-H-5606 hydraulic fluid per filling instructions placard, and with no load on the strut, inflate with air to 45.0 PSI. Do not over inflate.

CLEANING AND CARE

WINDSHIELD AND WINDOWS

The plastic windshield and windows should be cleaned with an aircraft windshield cleaner. Apply the cleaner sparingly with soft cloths, and rub with moderate pressure until all dirt, oil scum and bug stains are removed. Allow the cleaner to dry, then wipe it off with soft flannel cloths.

⚠ CAUTION

NEVER USE GASOLINE, BENZENE, ALCOHOL, ACETONE, FIRE EXTINGUISHER, ANTI-ICE FLUID, LACQUER THINNER OR GLASS CLEANER TO CLEAN THE PLASTIC. THESE MATERIALS WILL ATTACK THE PLASTIC AND MAY CAUSE IT TO CRAZE.

If a windshield cleaner is not available, the plastic can be cleaned with soft cloths moistened with Stoddard solvent to remove oil and grease.

Follow by carefully washing with a mild detergent and plenty of water. Rinse thoroughly, then dry with a clean moist chamois. Do not rub the plastic with a dry cloth since this builds up an electrostatic charge which attracts dust. Waxing with a good commercial wax will finish the cleaning job. A thin, even coat of wax, polished out by hand with clean soft flannel cloths, will fill in minor scratches and help prevent further scratching.

Do not use a canvas cover on the windshield unless freezing rain or sleet is anticipated since the cover may scratch the plastic surface.

PAINTED SURFACES

The painted exterior surfaces of your new Cessna have a durable, long lasting finish.

Generally, the painted surfaces can be kept bright by washing with water and mild soap, followed by a rinse with water and drying with cloths or a chamois. Harsh or abrasive soaps or detergents which cause corrosion or scratches should never be used. Remove stubborn oil and grease with a cloth moistened with Stoddard solvent. Take special care to make sure that the exterior graphics are not touched by the solvent. For complete care of exterior graphics refer to the Maintenance Manual.

To seal any minor surface chips or scratches and protect against corrosion, the airplane should be waxed regularly with a good automotive wax applied in accordance with the manufacturer's instructions. If the airplane is operated in a seacoast or other salt water environment, it must be washed and waxed more frequently to assure adequate protection. Special care should be taken to seal around rivet heads and skin laps, which are the areas most susceptible to corrosion. A heavier coating of wax on the leading edges of the wings and tail and on the cowl nose cap and propeller spinner will help reduce the abrasion encountered in these areas. Reapplication of wax will generally be necessary after cleaning with soap solution or after chemical deicing operations.

When the airplane is parked outside in cold climates and it is necessary to remove ice before flight, care should be taken to protect the painted surfaces during ice removal with chemical liquids. Isopropyl alcohol will satisfactorily remove ice accumulations without damaging the paint. However, keep the isopropyl alcohol away from the windshield and cabin windows since it will attack the plastic and may cause it to craze.

PROPELLER CARE

Preflight inspection of propeller blades for nicks, and wiping them occasionally with an oily cloth to clean off grass and bug stains will assure long blade life. Small nicks on the propeller, particularly near the tips and on the leading edges, should be dressed out as soon as possible since these nicks produce stress concentrations, and if ignored, may result in cracks or failure of the propeller blade. Never use an alkaline cleaner on the blades; remove grease and dirt with Stoddard solvent.

ENGINE CARE

The engine may be cleaned, using a suitable solvent, in accordance with instructions in the airplane Maintenance Manual. Most efficient cleaning is done using a spray type cleaner. Before spray cleaning, ensure that protection is afforded for components which might be adversely affected by the solvent. Refer to the Maintenance Manual for proper lubrication of controls and components after engine cleaning. The induction air filter should be replaced when its condition warrants, not to exceed 500 hours.

INTERIOR CARE

To remove dust and loose dirt from the upholstery and carpet, clean the interior regularly with a vacuum cleaner.

Blot up any spilled liquid promptly with cleansing tissue or rags. Do not pat the spot; press the blotting material firmly and hold it for several seconds. Continue blotting until no more liquid is taken up. Scrape off sticky materials with a dull knife, then spot clean the area.

Oily spots may be cleaned with household spot removers, used sparingly. Before using any solvent, read the instructions on the container and test it on an obscure place on the fabric to be cleaned. Never saturate the fabric with a volatile solvent; it may damage the padding and backing materials.

Soiled upholstery and carpet may be cleaned with foam type detergent, used according to the manufacturer's instructions. To minimize wetting the fabric, keep the foam as dry as possible and remove it with a vacuum cleaner.

For complete information related to interior cleaning, refer to the Maintenance Manual.

SUPPLEMENT
REVISION

MODEL 172S

PILOT'S OPERATING HANDBOOK
AND FAA APPROVED
AIRPLANE FLIGHT MANUAL

REVISION 10

7 JANUARY 2004

PART NUMBER:
172SUSLOG10

INSERT THE FOLLOWING PAGES INTO THE SUPPLEMENT SECTION OF THE PILOT'S OPERATING HANDBOOK

LOG OF APPROVED SUPPLEMENTS

NOTE

IT IS THE AIRPLANE OWNER'S RESPONSIBILITY TO ASSURE THAT HE OR SHE HAS THE LATEST REVISION TO EACH SUPPLEMENT OF A PILOT'S OPERATING HANDBOOK AND THE LATEST ISSUED "LOG OF APPROVED SUPPLEMENTS." THIS "LOG OF APPROVED SUPPLEMENTS" WAS THE LATEST REVISION AS OF THE DATE IT WAS SHIPPED BY CESSNA; HOWEVER, SOME CHANGES MAY HAVE OCCURRED AND THE OWNER SHOULD VERIFY THIS IS THE LATEST, MOST UP-TO-DATE VERSION BY CONTACTING CESSNA CUSTOMER SUPPORT AT (316) 517-5800.

SUPP. NO.	SUPPLEMENT NAME	REVISION LEVEL	EQUIPMENT INSTALLED
1	Bendix/King KX 155A VHF NAV/COMM with KI 208 or KI 209A Indicator Head	0	———
2	Bendix/King KT 76C Transponder with Blind Encoder	0	———
3	Bendix/King KMA 26 Audio Selector Panel	1	———
4	Pointer Model 3000-11 or Model 4000-11 Emergency Locator Transmitter (ELT)	2	———
5	Bendix/King KLN 89B Global Positioning System (GPS)	2	———
6	Bendix/King KR 87 Automatic Direction Finder (ADF)	1	———
7	Bendix/King Kap 140 Single Axis Autopilot	2	———
8	Winterization Kit	0	———
9	Davtron Model 803 Clock/OAT	0	———
10	Bendix/King KLN 89 Global Positioning System (GPS)	1	———

P/N: 172SUSL0618

LOG OF APPROVED SUPPLEMENTS

SUPP. NO.	SUPPLEMENT NAME	REVISION LEVEL	EQUIPMENT INSTALLED
12	Canadian Supplement	0	____
13	Bendix/King KCS-55A Slaved Compass System with KI-525A Horizontal Situation Indicator (HSI)	1	____
14	Reserved		
15	Bendix/King KAP 140 2 Axis Autopilot	5	____
16	Reserved		
17	Reserved		
18	Reserved		
19	Bendix/King KLN 94 Global Positioning System	4	____
20	Bendix/King KMA 28 Audio Selector Panel	0	____
21	Bendix/King KMD 550 Multi-Function Display	0	____
22	12 Volt Cabin Power System	0	____
24	Astrotech Model TC-2 Clock/OAT/Volt Indicator	0	____
25	Bendix/King KX 165A VHF NAV/COM	0	____
26	Bendix/King KDR 510 Flight Information Services (FIS)	0	____

CGR-30P Primary Engine Monitor

FAA-APPROVED POH/AFM Supplement, No. AFM022513, Rev. D

Airplane Make and Model	Reg. Number	Serial Number



s supplement must be attached to the FAA oved Airplane Flight Manual when the aircraft is modified by the installation of the primary CGR-30P instrument in accordance with STC SA02283SE.

The information contained herein supplements and/or supersedes the basic manual only in those areas listed herein. For limitations, procedures and performance information not contained in this supplement, consult the POH or AFM.

LIMITATION(S): No Change

PROCEDURES: The CGR-30P Main Screen displays the primary engine and aircraft instruments. This screen is displayed on power-up and is the screen that should be monitored for most of the flight. Buttons and Knob operate as follows:

(S)creens Button - Switches the display between the various screens.
ty Knob (push and turn) - Moves the cursor, selects functions and changes digits.
(E)xit Button- Exits out of a field or screen, returns the display to the Main Screen and acknowledges blinking digits, annunciators and remote Warning and Caution lights. When Exiting a field, changes made in that field will remain. When Exiting a screen, if a change has been made, a pop-up message will give you the option to save or disregard the changes.

To assist the pilot in identifying the current operating band (green, yellow, red, etc.), the CGR-30P displays the digital value for each function in its appropriate color. When a function reaches a red or yellow operating band, blinking digits for that function will alert the pilot. If the remote Warning and Caution lights have been installed, they will also blink and alert the pilot. To acknowledge the alarm and stop the blinking, press the (E)xit Button while viewing the Main Screen.

The Fuel Qtys screen displays estimated fuel remaining for each fuel tank. The digital readout for each estimated fuel level will be displayed in green unless the estimated remaining for that tank reaches zero, at which time it will be displayed in white. This calculation relies on the proper setting of the K-Factor and the action of the pilot to match the tank selected on the CGR-30P to the tank selected on the aircraft. The "Change To" column in the "Fuel Qtys" screen allows for ferring fuel from an Aux Tank and adding fuel to a tank. This procedure only manages the lated fuel remaining in the instrument, it does not physically transfer fuel in the aircraft. It is the pilots responsibility to insure the CGR-30P fuel management matches the management of fuel for the aircraft.

Continued on back...

Electronics International Inc. • 63296 Powell Butte Highway • Bend, OR 97701
www.Buy-Ei.com • (541) 318-6060

e CGR-30P is setup to receive GPS data, the fuel management screens will provide estimated based on the current GPS speed, GPS distance to the way point, the current fuel flow and current estimated fuel remaining. This data is used to calculate Time, Fuel Quantity and tance information. All calculated data will be displayed in green until 45 minutes or less of remaining (based on 75% Maximum Continuous Power) is reached, at which time the data be displayed in white. If GPS data is not available, the estimated data will be displayed as A."

y instrument can fail at any time. Acquire proper training to safely operate this aircraft with use of this instrument. The CGR-30P Operating Instructions must be readily available in the craft. Refer to the Operating Instructions for further operating and safety information.

ERFORMANCE: No Change

OADING INFORMATION: No Change

AA-Approved: _____ Date: JUN 2 1 2013
FOR Manager, Seattle Aircraft Certification Office

Electronics International Inc. • 63296 Powell Butte Highway • Bend, OR 97701
www.Buy-Ei.com • (541) 318-6060

SUPPLEMENTS

INTRODUCTION

The supplements in this section contain expanded operational procedures for both standard and optional equipment installed in the airplane. Operators should refer to each supplement to ensure that all limitations and procedures appropriate for their airplane are observed.

A Log Of Approved Supplements is provided, for convenience only, beginning on page Log 1 and is a numerical list of all supplements applicable to this airplane by name, number and revision level. This log should be used as a checklist to ensure all applicable supplements have been placed in the Pilot's Operating Handbook (POH). Supplements may be removed from the POH provided the equipment is not installed on the airplane. If equipment is installed on the airplane, however, the supplement(s) must be retained and updated as revisions to each supplement are issued.

Each individual supplement contains its own Log of Effective Pages. This log lists the page number and effective date of every page in the supplement. The log also lists the dates on which revisions to the supplement occurred. Additionally, the part number of the supplement provides information on the revision level. Refer to the following example:

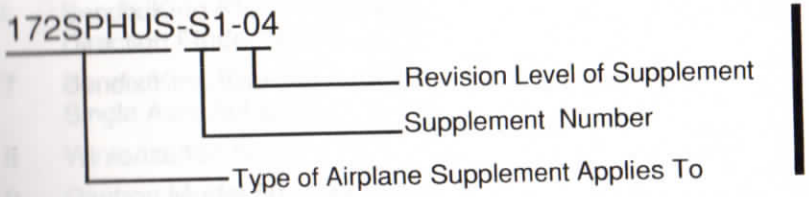

LOG OF APPROVED SUPPLEMENTS

NOTE

IT IS THE AIRPLANE OWNER'S RESPONSIBILITY TO ASSURE THAT HE OR SHE HAS THE LATEST REVISION TO EACH SUPPLEMENT OF A PILOT'S OPERATING HANDBOOK AND THE LATEST ISSUED "LOG OF APPROVED SUPPLEMENTS." THIS "LOG OF APPROVED SUPPLEMENTS" WAS THE LATEST REVISION AS OF THE DATE IT WAS SHIPPED BY CESSNA; HOWEVER, SOME CHANGES MAY HAVE OCCURRED AND THE OWNER SHOULD VERIFY THIS IS THE LATEST, MOST UP-TO-DATE VERSION BY CONTACTING CESSNA CUSTOMER SUPPORT AT (316) 517-5800.

SUPP. NO.	SUPPLEMENT NAME	REVISION LEVEL	EQUIPMENT INSTALLED
1	Bendix/King KX 155A VHF NAV/COMM with KI 208 or KI 209A Indicator Head	0	×
2	Bendix/King KT 76C Transponder with Blind Encoder	0	×
3	Bendix/King KMA 26 Audio Selector Panel	1	—
4	Pointer Model 3000-11 or Model 4000-11 Emergency Locator Transmitter (ELT)	2	×
5	Bendix/King KLN 89B Global Positioning System (GPS)	2	—
6	Bendix/King KR 87 Automatic Direction Finder (ADF)	1	—
7	Bendix/King Kap 140 Single Axis Autopilot	2	—
8	Winterization Kit	0	—
9	Davtron Model 803 Clock/OAT	0	×
10	Bendix/King KLN 89 Global Positioning System (GPS)	1	—

P/N : 172SUSLOG10

LOG OF APPROVED SUPPLEMENTS

SUPP. NO.	SUPPLEMENT NAME	REVISION LEVEL	EQUIPMENT INSTALLED
12	Canadian Supplement	0	
13	Bendix/King KCS-55A Slaved Compass System with KI-525A Horizontal Situation Indicator (HSI)	1	
14	Reserved		
15	Bendix/King KAP 140 2 Axis Autopilot	5	×
16	Reserved		
17	Reserved		
18	Reserved		
19	Bendix/King KLN 94 Global Positioning System	4	×
20	Bendix/King KMA 28 Audio Selector Panel	0	×
21	Bendix/King KMD 550 Multi-Function Display	0	×
22	12 Volt Cabin Power System	0	
24	Astrotech Model TC-2 Clock/OAT/Volt Indicator	0	
25	Bendix/King KX 165A VHF NAV/COM	0	
26	Bendix/King KDR 510 Flight Information Services (FIS)	0	

Cessna
A Textron Company

Pilot's Operating Handbook and FAA Approved Airplane Flight Manual

CESSNA MODEL 172S

AIRPLANES 172S8001 AND ON

SUPPLEMENT 1

BENDIX/KING KX 155A VHF NAV/COMM with KI 208 or KI 209A INDICATOR HEAD

SERIAL NO. _____

REGISTRATION NO. _____

This supplement must be inserted into Section 9 of the Pilot's Operating Handbook and FAA Approved Airplane Flight Manual.

FAA APPROVAL
FAA APPROVED UNDER FAR 21 SUBPART J
The Cessna Aircraft Co
Delegation Option Manufacturer CE-1
Executive Engineer
Date: July 10, 1998

Member of GAMA

8 July 1998

COPYRIGHT © 1998
CESSNA AIRCRAFT COMPANY
WICHITA, KANSAS, USA

172SPHUS-S1-00

SUPPLEMENT 1

BENDIX/KING KX 155A VHF NAV/COMM with KI 208 or KI 209A INDICATOR HEAD

The following Log of Effective Pages provides the date of issue for original and revised pages, as well as a listing of all pages in the Supplement. Pages which are affected by the current revision will carry the date of that revision

Revision Level	Date of Issue
0 (Original)	July 8, 1998

LOG OF EFFECTIVITY PAGES

PAGE	DATE	PAGE	DATE
Title (S1-1)	July 8/98	S1-9	July 8/98
S1-2	July 8/98	S1-10	July 8/98
S1-3	July 8/98	S1-11	July 8/98
S1-4	July 8/98	S1-12	July 8/98
S1-5	July 8/98	S1-13	July 8/98
S1-6	July 8/98	S1-14	July 8/98
S1-7	July 8/98	S1-15	July 8/98
S1-8	July 8/98	S1-16 Blank	July 8/98

SERVICE BULLETIN CONFIGURATION LIST

The following is a list of Service Bulletins that are applicable to the operation of the airplane, and have been incorporated into this supplement. This list contains only those Service Bulletins that are currently active.

Number	Title	Airplane Unit Effectivity	Revision Incorporation	Incorporated In Airplane

SUPPLEMENT

BENDIX/KING KX 155A VHF NAV/COMM with KI 208 or KI 209A INDICATOR HEAD

SECTION 1
GENERAL

The Bendix/King KX 155A VHF Nav/Comm, shown in Figure 1, consists of a panel-mounted receiver-transmitter and a KI 208 or KI 209A Indicator.

The set includes a 760-channel VHF communications receiver-transmitter and a 200-channel VHF navigation receiver. A 40-channel glide- slope receiver is also included if the KI 209A indicator is used. The communications receiver-transmitter receives and transmits signals between 118.00 and 136.975 MHz with 25-kHz spacing. Optional 8.33 kHz (2280 channel) Comm is available. The navigation receiver receives VOR and localizer signals between 108.00 and 117.95 MHz in 50-kHz steps. The glide slope receiver is automatically tuned when a localizer frequency is selected. The circuits required to interpret the VOR and localizer signals are also an integral part of the Nav receiver.

Large self-dimming gas discharge readouts display both the communications and navigation operating frequencies. The KX-155A's "flip-flop" preselect feature enables you to store one frequency in the standby display while operating on another and then interchange them instantly with the touch of a button. Both the active (COMM) and the standby (STBY) frequencies may be displayed at all times and are stored in nonvolatile memory without drain on the aircraft battery. KX 155A has 32 programmable comm channels, a stuck microphone alert and transmitter shutdown, Bearing To/From radial mode, course deviation indicator mode and an elapsed timer mode.

The Comm portion incorporates an automatic squelch. To override the automatic squelch, the Comm volume control knob is pulled out. Push the knob back in to reactivate the automatic squelch. A "T" will be displayed during transmit and "R" during valid signal reception.

The Nav portion uses the pull out feature of the Nav volume control to receive the Nav signal Ident. Pull the volume control knob out to hear the Ident signal plus voice. Push the knob in to attenuate the Ident signal and still hear Nav voice.

All controls for the Nav/Comm, except those for navigation course selection, are mounted on the front panel of the receiver-transmitter. Control lighting is provided by NAV/COMM interior lighting and the instrument panel flood lighting system. Operation and description of the audio selector panel used in conjunction with this radio is shown and described in Supplement 3 in this section.

NOTE

The unit has a stuck microphone alert feature. If the microphone is keyed continuously for greater than 33 seconds, the transmitter stops transmitting and the active Comm frequency flashes to alert the pilot of the stuck mic condition.

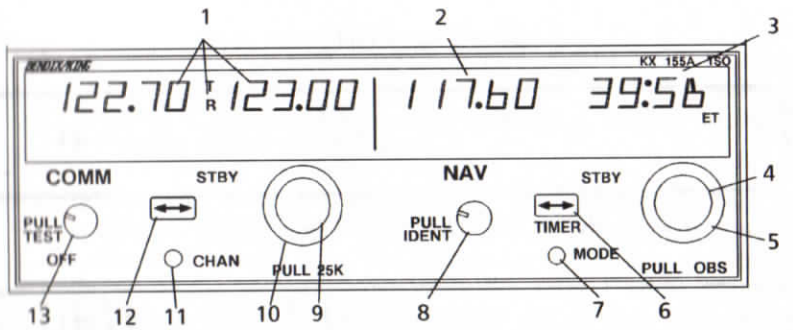

KX 155A VHF NAV/COMM

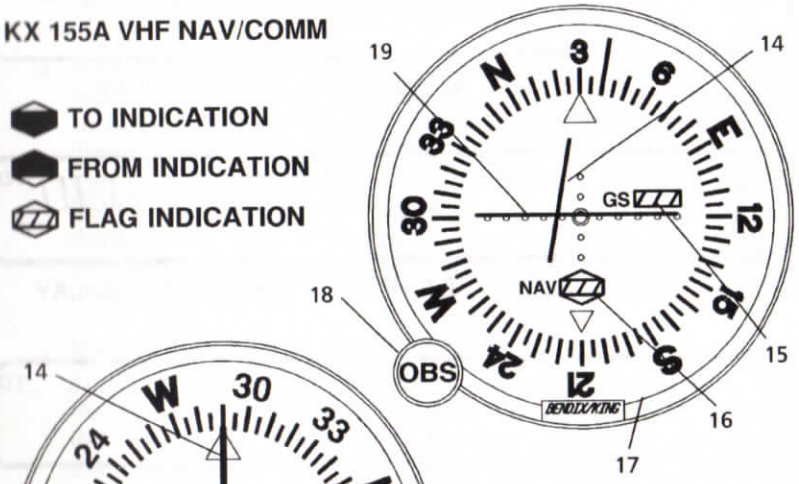

KI 209A INDICATOR

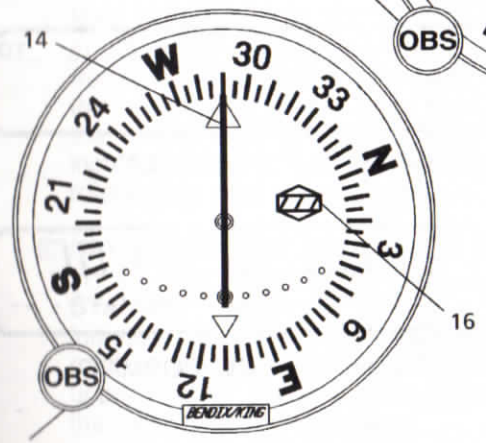

KI 208 INDICATOR HEAD

0585C1045
0585C1046
0585C1047

Figure 1. Bendix/King KX 155A VHF NAV/COMM with KI 208 or KI 209A Indicator Head (Sheet 1 of 7)

NAV FUNCTION DISPLAYS

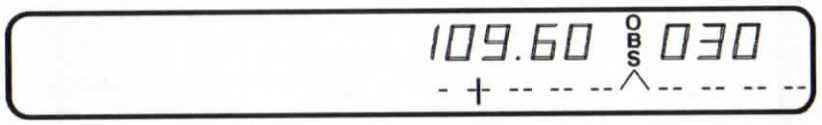

VOR MODE: ACTIVE/BEARING, CDI FORMAT



VOR MODE: ACTIVE/BEARING, FLAG DISPLAY

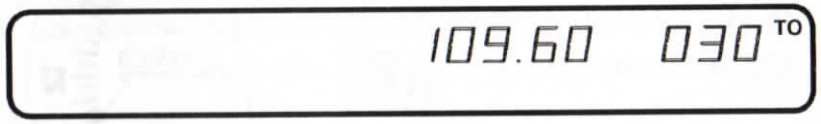

VOR MODE: ACTIVE "BEARING TO" FUNCTION DISPLAY

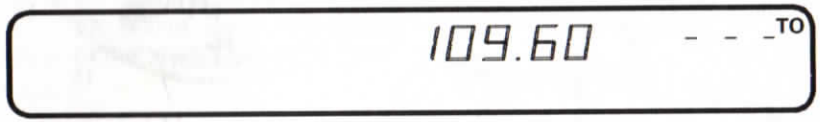

VOR MODE: ACTIVE/BEARING, FLAG DISPLAY

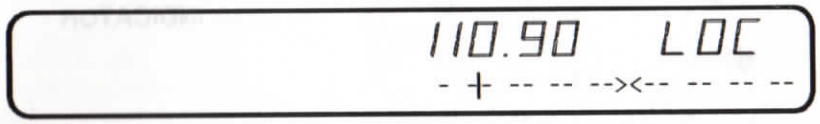

LOCALIZER MODE: FREQUENCY/CDI FORMAT

Figure 1. Bendix/King KX 155A VHF NAV/COMM with KI 208 or KI 209A Indicator Head (Sheet 2 of 7)

1. OPERATING COMM FREQUENCY DISPLAY -- Displays COMM ACTIVE and COMM STANDBY frequencies with a "T" between them to indicate TRANSMIT and an "R" to indicate RECEIVE modes of operation.

2. OPERATING NAV FREQUENCY DISPLAY -- The right portion of the display is allocated to NAV receiver ACTIVE and STANDBY information. The frequency channeling is similar to the COMM when operating in the frequency mode. The NAV ACTIVE and STANDBY frequencies are stored in the memory on power down and return on power up.

3. NAV STANDBY/OBS/Bearing/Radial/Timer Display -- The right side of the NAV display is controlled by the MODE SELECTOR BUTTON (see #7 below). With an active VOR frequency, this portion of the display shows the STANDBY frequency, OBS setting for the internal CDI, the bearing to the VOR station, radial from the VOR station, or a count-up/count-down timer. With an active localizer frequency, this portion of the display shows the standby frequency, the letters "LOC", or count-up/count-down timer.

4. NAV FREQUENCY SELECTOR KNOB (SMALL) -- Operates in 50 kHz steps. The NAV receiver's lower and upper frequency limits are 108.00 MHz and 117.95 MHz. Exceeding the upper limit of frequency band will automatically return to the lower limit and vice versa. A clockwise rotation will increase (inc) the previous frequency while a counterclockwise rotation will decrease (dec) the previous frequency.

5. NAV FREQUENCY SELECTOR KNOB (LARGE) -- Operates in 1 MHz steps. The frequency inc/dec operates the STANDBY frequency display. A clockwise rotation will increase the previous frequency while a counterclockwise rotation will decrease the previous frequency. Exceeding the upper limit of the frequency band will automatically return to the lower limit and vice versa.

Figure 1. Bendix/King KX 155A VHF NAV/COMM with KI 208 or KI 209A Indicator Head (Sheet 3 of 7)

6. NAV/FREQUENCY TRANSFER BUTTON (⟷) -- Interchanges the NAV Active and STANDBY frequencies. Depressing the NAV frequency transfer button for 2 seconds or more will cause the display to go into the ACTIVE ENTRY mode. Only the ACTIVE frequency will be displayed and it can be directly changed by using the NAV inc/dec knobs. The display will return to the ACTIVE/STANDBY mode when the NAV frequency transfer button is pushed.

7. MODE SELECTOR BUTTON -- Depressing the mode button will cause the NAV display to go from the ACTIVE/STANDBY format to the ACTIVE/CDI (Course Deviation Indicator) format. In the CDI mode, the frequency inc/dec knob (pushed in) channels the ACTIVE frequency. When the ACTIVE window is tuned to a VOR frequency, the standby frequency area is replaced by a three digit OBS (Omni Bearing Selector) display. The desired OBS course can be selected by pulling out the inner NAV frequency knob and turning it. This OBS display is independent of any OBS course selected on an external CDI. An "OBS" in the middle of the NAV display will flash while the inner NAV frequency knob is pulled out. The CDI is displayed on the line below the frequency/OBS. When the ACTIVE window is tuned to a localizer frequency, the standby frequency area is replaced by "LOC". When the received signal is too weak to ensure accuracy the display will "FLAG".

   Depressing the mode button again will cause the NAV display to go from the ACTIVE/CDI format to the ACTIVE/BEARING format. In the BEARING mode, the frequency inc/dec knob channels the ACTIVE frequency window. Depressing the frequency transfer button will cause the ACTIVE frequency to be placed in blind storage and the STANDBY frequency (in blind storage) to be displayed in the ACTIVE window display. In bearing mode, the right hand window of the NAV display shows the bearing TO the station. When a too weak or invalid VOR signal is received the display flags (dashes).

Figure 1. Bendix/King KX 155A VHF NAV/COMM with KI 208 or KI 209A Indicator Head (Sheet 4 of 7)

Another push of the mode button will cause the NAV display to go from the ACTIVE/BEARING format to the ACTIVE/RADIAL format. In the RADIAL mode, the frequency inc/dec knobs channel the ACTIVE frequency window and depressing the frequency transfer button will cause the ACTIVE frequency to be placed in blind storage and the STANDBY frequency (in blind storage) to be displayed in the ACTIVE window display. In radial mode of operation, the right hand window of NAV display shows the radial FROM the station. When a too weak or invalid VOR signal is received the display flags (dashes).

Another push of the mode button will cause the unit to go into the TIMER mode. When the unit is turned on, the elapsed timer (ET) begins counting upwards from zero. The timer can be stopped and reset to zero by pushing the NAV frequency transfer button for 2 seconds or more causing the ET on the display to flash. In this state, the timer can be set as a countdown timer or the elapsed timer can be restarted. The countdown timer is set by using the NAV frequency inc/dec knobs to set the desired time and then pushing the NAV frequency transfer button to start the timer. The large knob selects minutes, the small knob in the "in" position selects 10 second intervals, and the small knob in the "out" position selects individual seconds. After the countdown timer reaches zero, the counter will begin to count upwards indefinitely while flashing for the first 15 seconds. When the elapsed timer is reset to zero it may be restarted again by momentarily pushing the NAV frequency transfer button.

8. NAV/VOLUME CONTROL (PULL IDENT) -- Adjusts volume of navigation receiver audio. When the knob is pulled out, the Ident signal plus voice may be heard. The volume of voice/ident can be adjusted by turning this knob.

Figure 1. Bendix/King KX 155A VHF NAV/COMM with KI 208 or KI 209A Indicator Head (Sheet 5 of 7)

9. COMM FREQUENCY SELECTOR KNOB (INNER) -- This smaller knob is designed to change the indicated frequency in steps of 50-kHz when it is pushed in, and in 25-kHz steps when it is pulled out. For 8.33 kHz versions, channels are incremented in 25 kHz steps with the knob pushed in and 8.33 kHz with the knob pulled out.

10. COMM FREQUENCY SELECTOR KNOB (OUTER) -- The outer, larger selector knob is used to change the MHz portion of the frequency display. At either band-edge of the 118-136 MHz frequency spectrum, an offscale rotation will wrap the display around to the other frequency band-edge (i.e., 136 MHz advances to 118 MHz).

11. CHANNEL BUTTON -- Pressing the CHAN button for 2 or more seconds will cause the unit to enter the channel program (PG) mode. Upon entering the channel program mode, the channel number will flash indicating that it can be programmed. The desired channel can be selected by turning the comm kHz knob. The channel frequency can be entered by pushing the comm transfer button which will cause the standby frequency to flash. The comm frequency knobs are then used to enter the desired frequency. If dashes (located between 136 MHz and 118 MHz) are entered instead of a frequency, the corresponding channel is skipped in channel selection mode. Additional channels may be programmed by pressing the COMM transfer button and using the same procedure. The channel information is saved by pushing the CHAN button which will also cause the unit to return to the previous frequency entry mode.

    The channel selection mode (CH) can then be entered by momentarily pushing the CHAN button. The comm frequency knobs can be used to select the desired channel. The unit will automatically default to the previous mode if no channel is selected within 2 seconds after entering the channel selection mode. The unit is placed in the transmit mode by depressing a mic button.

Figure 1. Bendix/King KX 155A VHF NAV/COMM with KI 208 or KI 209A Indicator Head (Sheet 6 of 7)

12. COMM FREQUENCY TRANSFER BUTTON (⟷) -- Interchanges the frequencies in the USE and STANDBY displays. To tune the radio to the desired operating frequency, the desired frequency must be entered into the standby display and then the transfer button must be pushed. This will trade the contents of the active and standby displays. The operating frequency can also be entered by accessing the ACTIVE ENTRY (direct tune) mode which is done by pushing the COMM TRANSFER button for 2 or more seconds. In the direct tune mode, only the active part of the display is visible. The desired frequency can be directly entered into the display. Push the COMM TRANSFER button again to return to the active/standby display.
    The transceiver is always tuned to the frequency appearing in the ACTIVE display. It is, therefore, possible to have two different frequencies stored in the ACTIVE and STANDBY displays and to change back and forth between them at the simple push of the transfer button.

13. COMM VOLUME CONTROL (OFF/PULL/TEST) -- Rotate the VOL knob clockwise from the OFF position. Pull the VOL knob out and adjust for desired listening level. Push the VOL knob back in to actuate the automatic squelch. The VOL knob may also be pulled out to hear particularly weak signals.

14. VOR/Localizer Needle or CDI needle.

15. Glideslope Flag

16. TO-FROM-NAV FLAG

17. Azimuth Card

18. OBS Knob

19. Glideslope Needle

Figure 1. Bendix/King KX 155A VHF NAV/COMM with KI 208 or KI 209A Indicator Head (Sheet 7 of 7)

SECTION 2
LIMITATIONS

There is no change to the airplane limitations when this avionic equipment is installed.

SECTION 3
EMERGENCY PROCEDURES

There is no change to the airplane emergency procedures when this avionic equipment is installed. However, if the frequency readouts fail, the radio will remain operational on the last frequency selected. If either frequency transfer button is pressed and held while power is applied to the unit, the unit wakes up with 120.00 MHz in the COMM use frequency and 110.00 MHz in the NAV active frequency, with both COMM and NAV in the active entry mode. This will aid the pilot in blind tuning the radio.

SECTION 4
NORMAL PROCEDURES

COMMUNICATION RECEIVER-TRANSMITTER OPERATION:

1. OFF/PULL/TEST Volume Control -- Turn clockwise; pull out and adjust to desired audio level; push control back in to activate the automatic squelch.
2. MIC Selector Switch (on audio control panel) -- SET to COMM 1.
3. SPEAKER Selector (on audio control panel) -- SET to desired mode.
4. COMM Frequency Selector Knobs -- Select desired operating frequency.
5. COMM Transfer Button -- PRESS to transfer desired frequency from the STBY display into the COMM display.

6. Mic Button:
   a. To transmit -- Press button and speak in microphone.

NOTE

During COMM transmission, a lighted "T" will appear between the "COMM" and "STBY" displays to indicate that the transceiver is operating in the transmit mode.

   b. To Receive -- RELEASE mike button.

NAVIGATION RECEIVER OPERATION:

1. NAV Frequency Selector Knobs -- SELECT desired operating frequency in "STBY" display.
2. NAV TRANSFER BUTTON -- PRESS to transfer desired frequency from the "STBY" display into the "NAV" display.
3. Speaker Selector (on audio control panel) -- SET to desired mode..
4. NAV Volume Control --
   a. ADJUST to desired audio level.
   b. PULL out to identify station.

VOR OPERATION:

Channel the NAV Receiver to the desired VOR and monitor the audio to positively identify the station. To select an OBS course, turn the OBS knob to set the desired course under the lubber line. When a signal is received, the NAV flag will pull out of view and show a "TO" or "FROM" flag as appropriate for the selected course.

LOC OPERATION

Localizer circuitry is energized when the NAV Receiver is channeled to an ILS frequency. Monitor the LOC audio and positively identify the station. The NAV flag will be out of view when the signal is of sufficient strength to be usable.

GLIDESLOPE OPERATION

The glideslope receiver is automatically channeled when a localizer frequency is selected. A separate warning flag is provided to indicate usable signal conditions.

PILOT CONFIGURATION

This mode can be accessed by pressing and holding the NAV Mode Button for more than 2 seconds and then pressing the Nav Frequency Transfer Button for an additional 2 seconds, while continuing to hold the NAV Mode Button. When the Pilot Config Mode is entered the unit will show the "SWRV" mnemonic which is the unit software revision level. Adjustment pages can be accessed by MODE button presses.

The pilot may adjust two parameters in the pilot configuration, the display minimum brightness and sidetone volume level. Minimum Brightness (BRIM) will have a range of 0-255. The dimmest is 0 and the brightest is 255. Sidetone volume level is adjusted when SIDE is displayed. Values from 0-255 may be selected with 0 being least volume, 255 being the greatest.

Adjustment	Mnemonic	Min Level	Max Level
Software Revision Number	SWRV	- - -	- - -
Minimum Display Brightness	BRIM	0	255
Sidetone Level	SIDE	0	255

Subsequent presses of the MODE button sequences through SWRV, BRIM, SIDE, and then back to SWRV.

Pressing the NAV Transfer Button momentarily exits Pilot configuration mode. The NAV returns to its pre-Pilot Config state with the new brightness and sidetone levels stored in nonvolatile memory.

SECTION 5
PERFORMANCE

There is no change to the airplane performance when this avionic equipment is installed. However, the installation of an externally mounted antenna, or several related antennas, may result in a minor reduction in cruise performance.

Cessna
A Textron Company

Pilot's Operating Handbook and FAA Approved Airplane Flight Manual

CESSNA MODEL 172S

AIRPLANES 172S8001 AND ON

SUPPLEMENT 2

BENDIX/KING KT 76C TRANSPONDER WITH BLIND ENCODER

SERIAL NO. _____

REGISTRATION NO. _____

This supplement must be inserted into Section 9 of the Pilot's Operating Handbook and FAA Approved Airplane Flight Manual.

FAA APPROVAL
FAA APPROVED UNDER FAR 21 SUBPART J
The Cessna Aircraft Co
Delegation Option Manufacturer CE-1
Executive Engineer
Date: July 10, 1998

Member of GAMA

8 July 1998

COPYRIGHT © 1998
CESSNA AIRCRAFT COMPANY
WICHITA, KANSAS, USA

172SPHUS-S2-00

SUPPLEMENT 2

BENDIX/KING KT 76C TRANSPONDER with BLIND ENCODER

The following Log of Effective Pages provides the date of issue for original and revised pages, as well as a listing of all pages in the Supplement. Pages which are affected by the current revision will carry the date of that revision

Revision Level	Date of Issue
0 (Original)	July 8, 1998

LOG OF EFFECTIVITY PAGES

PAGE	DATE	PAGE	DATE
Title (S2-1)	July 8/98	S2-6	July 8/98
S2-2	July 8/98	S2-7	July 8/98
S2-3	July 8/98	S2-8	July 8/98
S2-4	July 8/98	S2-9	July 8/98
S2-5	July 8/98	S2-10 Blank	July 8/98

SERVICE BULLETIN CONFIGURATION LIST

The following is a list of Service Bulletins that are applicable to the operation of the airplane, and have been incorporated into this supplement. This list contains only those Service Bulletins that are currently active.

Number	Title	Airplane Unit Effectivity	Revision Incorporation	Incorporated In Airplane

SUPPLEMENT

BENDIX/KING KT 76C TRANPONDER with BLIND ENCODER

SECTION 1

GENERAL

The Bendix/King Transponder (Type KT 76C), shown in Figure 1, is the airborne component of an Air Traffic Control Radar Beacon System (ATCRBS). The transponder enables the ATC ground controller to "see" and identify more readily the aircraft on the radarscope. The blind encoder (SSD120-20) (also shown in Figure 1) enables the transponder to automatically report aircraft altitude to ATC.

The Bendix/King Transponder system consists of a panel-mounted unit and an externally-mounted antenna. The transponder receives interrogating pulse signals on 1030 MHz and transmits coded pulse-train reply signals on 1090 MHz. It is capable of replying to Mode A (aircraft identification) and also to Mode C (altitude reporting) interrogations on a selective reply basis on any of 4096 information code selections. When a panel-mounted SSD120-20 Blind Encoder (not part of KT 76C Transponder system) is included in the avionic configuration, the transponder can provide altitude reporting in 100-foot increments between -1000 and +20,000 feet.

The KT 76C features microprocessor and LSI (Large Scale Integrated) control. Mode and code selection are performed using the rotary knob and numeric buttons and all functions including the flight level altitude are presented on a gas discharge display. All display segments are automatically dimmed by a photocell type sensor.

A VFR programming sequence, described in Section 4, allows the pilot to preprogram any single code such as "1200" into the KT 76C. Pressing the VFR button instantly returns the KT 76C to the preprogrammed code without having to manually enter "1200".

All Bendix/King Transponder operating controls are located on the front panel of the unit. Functions of the operating controls are described in Figure 1.

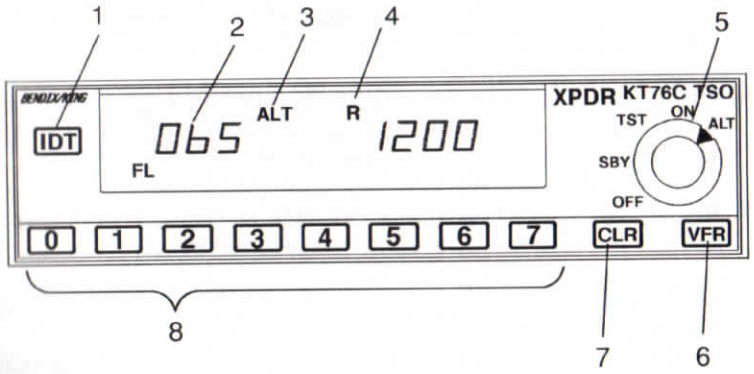

1. IDENT BUTTON (IDT) - When depressed, selects special identifier pulse to be transmitted with transponder reply to effect immediate identification of the airplane on the ground controller's display. ("R" will illuminate steadily for approximately 18 seconds. Button illumination is controlled by the avionic light dimming rheostat.

2. ALTITUDE DISPLAY - Displays the pressure altitude on the left side of the display. The display is in hundreds of feet. "FL" is annunciated to indicate Flight Level altitude. Flight Level is a term to indicate that the altitude is not true altitude, but barometric altitude which is not corrected for local pressure. For Example, "FL-040" corresponds to an altitude of 4000 feet, meaning sea level pressure of 29.92 inches of mercury.

   The Flight Level altitude is only displayed when the altitude reporting is enabled, i.e. in Altitude mode. If an invalid code from the altimeter is detected dashes will appear in the altitude window. Altitude reporting is disabled if the altitude window is blank or has dashes.

Figure 1. Bendix/King KT 76C Transponder with Blind Encoder
(Sheet 1 of 2)

3. MODE ANNUNCIATORS - Displays the operating mode of the transponder.

4. REPLY INDICATOR (R) - "R" is illuminated momentarily when the transponder is replying to a valid interrogation and during the 18 ±2 seconds following the initiation of an Ident.

5. MODE SELECTOR KNOB - Controls application of power and selects transponder operating mode as follows:

   OFF - Turns set off.

   SBY - Turns set on for standby power and code selection. "SBY" is annunciated.

   TST - Self-test function. The transmitter is disabled. All display segments will illuminate.

   ON - Turns set on and enables transponder to transmit Mode A (aircraft identification) reply pulses. ON is annunciated.

   ALT - Turns set on and enables transponder to transmit either Mode A (aircraft identification) reply pulses and Mode C (altitude reporting) pulses selected automatically by the interrogating signal. ALT is annunciated.

6. VFR CODE BUTTON (VFR) - Pressing the VFR Button will cause a pre-programmed Mode A reply code to supersede whatever Mode A reply code was previously in use. Button illumination is controlled by the RADIO LT dimming rheostat

7. CLEAR BUTTON (CLR) -- Pressing the CLR button will delete the last Mode A code digit entered.

8. NUMERIC KEYS 0-7 - Selects assigned Mode A reply code. The new code will be transmitted after a 5-second delay.

Figure 1. Bendix/King KT 76C Transponder with Blind Encoder (Sheet 2 of 2)

SECTION 2
LIMITATIONS

There is no change to the airplane limitations when this avionic equipment is installed.

SECTION 3
EMERGENCY PROCEDURES

TO TRANSMIT AN EMERGENCY SIGNAL:

1. Mode Selector Knob -- ALT.
2. Numeric Keys 0-7 -- SELECT 7700 operating code.

TO TRANSMIT A SIGNAL REPRESENTING LOSS OF ALL COMMUNICATIONS (WHEN IN A CONTROLLED ENVIRONMENT):

1. Mode Selector Knob -- ALT.
2. Numeric Keys 0-7 -- SELECT 7600 operating code.

SECTION 4
NORMAL PROCEDURES

BEFORE TAKEOFF:

1. Mode Selector Knob -- SBY.

TO TRANSMIT MODE A (AIRCRAFT IDENTIFICATION) CODES IN FLIGHT:

1. Numeric Keys 0-7 -- SELECT assigned code..

2. Mode Selector Knob -- ON.

NOTES

- During normal operation with Mode Selector Knob in ON position, reply indicator flashes, indicating transponder replies to interrogations.
- Mode A reply codes are transmitted in ALT also; however, Mode C codes are suppressed when the Mode Selector Knob is positioned to ON.

3. IDT Button -- DEPRESS momentarily when instructed by ground controller to "squawk IDENT" ("R" will illuminate steadily indicating IDENT operation).

TO TRANSMIT MODE C (ALTITUDE REPORTING) CODES IN FLIGHT:

1. Transponder Code Selector Knob -- SELECT assigned code.
2. Mode Selector Knob -- ALT.

NOTES

- When directed by ground controller to "stop altitude squawk", turn Mode Selector Knob to ON for Mode A operation only.
- Altitude transmitted by the transponder for altitude squawk and displayed on the KT 76C panel is pressure altitude (referenced to 29.92") and conversion to indicated altitude is done in the ATC computers.

TO SELF-TEST TRANSPONDER OPERATION:

1. Mode Selector Knob -- TST Check all displays.
2. Mode Selector Knob -- SELECT desired function.

TO PROGRAM VFR CODE:

1. Mode Selector Knob -- SBY.
2. Numeric Keys 0-7 -- SELECT desired VFR code.
3. IDT Button -- PRESS AND HOLD.
   a. VFR Code Button -- PRESS (while still holding IDT button) to place new VFR code in nonvolatile memory for subsequent call up.

SECTION 5
PERFORMANCE

There is no change to the airplane performance when this avionic equipment is installed. However, the installation of an externally-mounted antenna, or related external antennas, may result in a minor reduction in cruise performance.

Cessna
A Textron Company

Pilot's Operating Handbook and FAA Approved Airplane Flight Manual

CESSNA MODEL 172S

AIRPLANES 172S8001 AND ON

SUPPLEMENT 3

BENDIX/KING KMA 26 AUDIO SELECTOR PANEL

SERIAL NO. _____

REGISTRATION NO. _____

This supplement must be inserted into Section 9 of the Pilot's Operating Handbook and FAA Approved Airplane Flight Manual.

FAA APPROVAL
FAA APPROVED UNDER FAR 21 SUBPART J
The Cessna Aircraft Co
Delegation Option Manufacturer CE-1
Executive Engineer
Date: 27June 2000

Member of GAMA

8 July 1998

Revision 1 - 30 May 2000

COPYRIGHT © 1998
CESSNA AIRCRAFT COMPANY
WICHITA, KANSAS, USA

SUPPLEMENT 3

BENDIX/KING KMA 26 AUDIO SELECTOR PANEL

The following Log of Effective Pages provides the date of issue for original and revised pages, as well as a listing of all pages in the Supplement. Pages which are affected by the current revision will carry the date of that revision

Revision Level	Date of Issue
0 (Original)	July 8, 1998
1	May 30, 2000

LOG OF EFFECTIVITY PAGES

PAGE	DATE	PAGE	DATE
Title (S3-1)	May 30/00	S3-6	July 8/98
S3-2	May 30/00	S3-7	July 8/98
S3-3	July 8/98	S3-8	May 30/00
S3-4	July 8/98	S3-9	July 8/98
S3-5	July 8/98	S3-10 blank	July 8/98

SERVICE BULLETIN CONFIGURATION LIST

The following is a list of Service Bulletins that are applicable to the operation of the airplane, and have been incorporated into this supplement. This list contains only those Service Bulletins that are currently active.

Number	Title	Airplane Unit Effectivity	Revision Incorporation	Incorporated In Airplane

SUPPLEMENT

BENDIX/KING KMA 26 AUDIO SELECTOR PANEL

SECTION 1
GENERAL

The Bendix/King KMA 26 Audio Selector Panel is a combination audio amplifier, an audio distribution panel intercom, and a marker beacon receiver. The audio amplifier is for amplification of the audio signals for the speaker system. All receiver audio distribution functions are controlled by two rows of pushbuttons. A rotary selector switch on the right side of the console connects the microphone to either EMG, Com 1, Com 2, Com 3 or PA (Unused position). All operating controls are shown and described in Figure 1.

A crystal-controlled superheterodyne marker beacon receiver with 3-light presentation is incorporated within the unit. Dimming circuitry for the marker lamps automatically adjusts brightness appropriate to the cockpit ambient light level. Hi and Lo sensitivity and lamp test functions are also provided.

Light dimming for the audio control panel is manually controlled by the RADIO light rheostat knob.

MARKER FACILITIES

MARKER	IDENTIFYING TONE	LIGHT*
Inner, Airway & Fan	Continuous 6 dots/sec (3000 Hz)	White
Middle	Alternate dots and dashes (1300 Hz)	Amber
Outer	2 dashes/sec (400 Hz)	Blue

*When the identifying tone is keyed, the respective indicating light will blink accordingly.

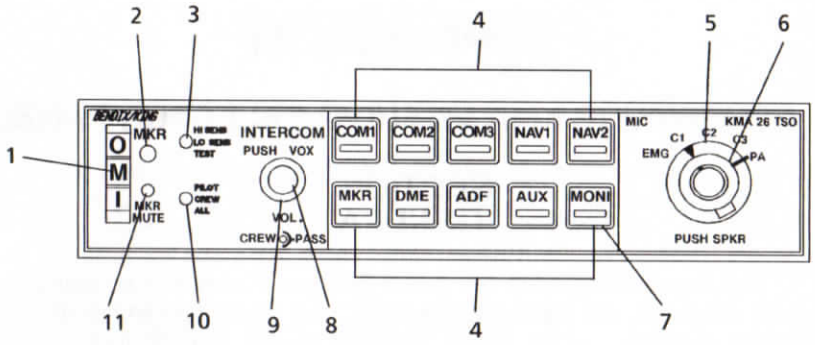

1. MARKER BEACON ANNUNCIATOR LIGHTS -- The three-light marker beacon receiver built into the KMA 26 gives a visual and aural signal when the ship's antenna passes over a 75 MHz beacon. The blue, amber, and white lights on the faceplate, as well as the audio tones, identify the beacon type.

   INNER, AIRWAY and FAN -- Light illuminates white to indicate passage of ILS inner, airway or fan marker beacons.

   OUTER -- Light illuminates blue to indicate passage of outer marker beacon.

   MIDDLE -- Light illuminates amber to indicate passage of middle marker beacon.

2. PHOTOCELL FOR AUTOMATIC DIMMING OF MARKER BEACON LIGHTS AND SELECT BUTTON -- The photocell in the faceplate automatically dims the marker lights as well as the green annunciators in the Speaker Audio Select Buttons for night operation.

Figure 1. Bendix/King KMA 26 Audio Selector Panel (Sheet 1 of 4)

3. MARKER BEACON SENSITIVITY LAMP AND TEST SWITCH --The "MKR" Audio Select button must be pushed so that the green annunciator is illuminated for the marker beacon to receive to provide an audio signal at beacon passage. When this switch is on "HI SENS" (upper) position, the high sensitivity is selected which permits you to hear the outer marker tone about a mile out. At this point you may select the the "LO SENS" (middle) position to temporarily silence the tone. It will start to sound again when you are closer to the marker, giving you a more precise indication of its location.

4. AUDIO SELECT BUTTONS -- Push button audio selection is available for three Communications receivers ("COM 1", "COM 2", and "COM 3"), two Navigation receivers ("NAV 1" and "NAV 2"), the internal Marker Beacon receiver ("MKR"), one DME, one ADF, and one additional auxiliary receiver ("AUX"). The "AUX" position could be used, for example, for a second DME or ADF. When a receiver's audio is selected, the green annunciator illuminates at the bottom of the button. Push the button again to deselect the receiver's audio.

5. MICROPHONE SELECTOR SWITCH (MIC) -- Used to select the desired transmitter for the cockpit microphones. The "C1", "C2", and "C3" positions are for transmitting on the Com 1, Com 2, and Com 3 communications transceivers, respectively. The "EMG" (emergency) position is used to bypass the KMA 26's audio amplifier and directly connects Com 1 to the pilot's microphone and headphones. This provides a fail-safe method of communication should the unit fail. The "PA" position may be selected when the aircraft is configured with a passenger address capability. The "Auto Com" feature always provides automatic headphone audio selection to match the Com transmitter in use. To add speaker audio, simply push the Speaker Select Switch (inner right knob) to the "in" position. Pulling the switch to the "out" position removes speaker audio.

Figure 1. Bendix/King KMA 26 Audio Selector Panel (Sheet 2 of 4)

6. SPEAKER SELECT (PUSH SPKR) SWITCH -- With the Speaker Select Switch pushed in, both headphone and cabin speaker audio will be heard. Headphone audio is active full-time. Headphone audio cannot be deselected.

7. MONITOR SELECT (MONI) BUTTON -- When activated, if Com 1 is selected on the Microphone Selector Switch then Com 2 audio is automatically routed to the speaker. Or if Com 2 is selected on the Microphone Selector Switch, then Com 1 is routed to the speaker. Pressing the "MONI" button again will disable the feature. Initially when "MONI" is selected the green annunciators in the button flash for approximately 5 seconds, then remains steady while the Com annunciation returns to its previous state.

8. CREW INTERCOM VOLUME (VOL CREW) KNOB and INTERCOM VOX SENSITIVITY SET (INTERCOM PUSH VOX) SWITCH -- Inside knob adjusts Pilot and Copilot intercom volume. Intercom operation is voice activated (VOX), where intercom becomes active automatically when a crew member or passenger begins to speak. Set the intercom VOX squelch by momentarily pressing and releasing the left inner knob when no one is speaking.

9. PASSENGER INTERCOM VOLUME (VOL PASS) KNOB -- Adjusts passenger intercom volume.

Figure 1. Bendix/King KMA 26 Audio Selector Panel (Sheet 3 of 4)

10. INTERCOM MODE SELECT SWITCH -- Has three modes "ALL", "CREW", AND "PILOT" which are selected with the toggle switch on the lower left side on the faceplate. In the "ALL" position the pilot, copilot, and passengers are all on the same intercom "loop" and everyone hears the radios. In the "CREW" position the pilot and copilot are on one intercom loop and can hear the radios while the passengers have their own dedicated intercom and do not hear the radios. In the "PILOT" mode the pilot hears the radios but is isolated from the intercom while the copilot and passengers are on the same intercom loop and do not hear the radios.

    When either the "ALL" or "CREW" intercom modes are selected, the pilot's and copilot's intercom volume is controlled by rotating the Crew Intercom Volume Knob (left inner knob) while the passenger's volume is controlled by rotating the Passenger Intercom Volume Knob (left outer knob). When the "PILOT" intercom mode is selected, the copilot's and passenger's volume is controlled with the Passenger Intercom Volume Knob. Remember, the volume knobs on the KMA 26 control intercom volume only, not the receiver's volume.

11. MARKER MUTE BUTTON -- Mutes currently active marker beacon audio.

Figure 1. Bendix/King KMA 26 Audio Selector Panel (Sheet 4 of 4)

SECTION 2
LIMITATIONS

There is no change to the airplane limitations when this avionic equipment is installed.

SECTION 3
EMERGENCY PROCEDURES

In the event of a failure of the audio amplifier in the KMA 26, as evidenced by the inability to transmit in COM 1, 2 or 3.

1. MIC Selector Switch -- EMG.

NOTE

This action bypasses the KMA 26 audio amplifier and connects the pilot's mic/head set directly to COM 1.

SECTION 4
NORMAL PROCEDURES

AUDIO CONTROL SYSTEM OPERATION:

1. MIC Selector Switch -- Turn to desired transmitter.
2. SPEAKER and Audio Select Button(s) -- SELECT desired receiver(s).

NOTES

Rotation of the MIC selector switch selects the Com audio automatically.

MARKER BEACON RECEIVER OPERATION:

1. TEST Position -- HOLD toggle down momentarily to verify all lights are operational.
2. SENS Selections -- Select HI sensitivity for airway flying or LO for ILS/LOC approaches.

SECTION 5
PERFORMANCE

There is no change to the airplane performance when this avionic equipment is installed. However, the installation of an externally mounted antenna or related external antennas, may result in a minor reduction in cruise performance.

Cessna
A Textron Company

Pilot's Operating Handbook and FAA Approved Airplane Flight Manual

CESSNA MODEL 172S

AIRPLANES 172S8001 AND ON

SUPPLEMENT 4

POINTER MODEL 3000-11 OR MODEL 4000-11 EMERGENCY LOCATOR TRANSMITTER

SERIAL NO._____

REGISTRATION NO._____

This supplement must be inserted into Section 9 of the Pilot's Operating Handbook and FAA Approved Airplane Flight Manual when the Pointer Model 3000-11 or Model 4000-11 Emergency Locator Transmitter is installed. The Pointer Model 4000-11 Emergency Locator Transmitter is approved for use only in the USA, Canada and Japan.

FAA APPROVAL
FAA APPROVED UNDER FAR 21 SUBPART J
The Cessna Aircraft Co
Delegation Option Manufacturer CE-1
Executive Engineer
Date: 27 June 2000

Member of GAMA

8 July 1998

Revision 2 - 7 July 2003

COPYRIGHT © 1998
CESSNA AIRCRAFT COMPANY
WICHITA, KANSAS, USA

SUPPLEMENT 4

POINTER MODEL 3000-11 OR MODEL 4000-11 EMERGENCY LOCATOR TRANSMITTER (ELT)

Use the Log of Effective Pages to determine the current status of this supplement. Pages affected by the current revision are indicated by an asterisk (*) preceeding the page number.

Supplement Status	Date
Original Issue	8 July 1998
Revision 1	30 May 2000
Revision 2	7 July 2003

APPROVED BY
FAA APPROVED UNDER FAR 21 SUBPART J
The Cessna Aircraft Co.
Delegation Option Authorization DOA-100129-CE
Executive Engineer
07-07-03
DATE OF APPROVAL

LOG OF EFFECTIVE PAGES

	Page	Page Status	Revision Number
*	S4-1 thru S4-3	Revision	2
	S4-4 thru S4-9/S4-10	Revision	1

SERVICE BULLETIN CONFIGURATION LIST

The following is a list of Service Bulletins that are applicable to the operation of the airplane, and have been incorporated into this supplement. This list contains only those Service Bulletins that are currently active.

Number	Title	Airplane Serial Effectivity	Revision Incorporation	Incorporated In Airplane

SUPPLEMENT 4

POINTER MODEL 3000-11 OR MODEL 4000-11 EMERGENCY LOCATOR TRANSMITTER (ELT)

SECTION 1

GENERAL

This supplement provides information which must be observed when operating the Pointer Model 3000-11 or Model 4000-11 Emergency Locator Transmitter. The Pointer Model 4000-11 Emergency Locator Transmitter is approved for use only in the USA, Canada and Japan.

Both the Pointer Model 3000-11 ELT (which incorporates the english placard) and Model 4000-11 ELT (which incorporates the bilingual placard) consist of a self-contained dual-frequency solid-state transmitter powered by a battery pack consisting of five alkaline "C" cell batteries and is automatically activated by a deceleration sensing inertia "G" switch, which is designed to activate when the unit senses longitudinal inertia forces as required in TSO-C91A. Also, a remote switch/annunciator is installed on the top right hand side of the copilot's instrument panel for control of the ELT from the flight crew station. The annunciator, which is in the center of the rocker switch, illuminates when the ELT transmitter is transmitting. The ELT emits an omni-directional signal on the international distress frequencies of 121.5 MHz and 243.0 MHz. General aviation and commercial aircraft, the FAA and CAP monitor 121.5 MHz, and 243.0 MHz is monitored by the military.

The ELT is contained in a high impact, fire retardant, glass filled Lexan case with carrying handle and is mounted behind the aft cabin partition wall on the right side of the tailcone. To gain access to the unit, unfasten the turn fasteners on the aft cabin partition. The ELT is operated by a control panel at the forward facing end of the unit or by the remote switch/annunciator located on the top right hand portion of the copilot's instrument panel (see Figure 1).

Power for the transmitter is provided by an alkaline battery pack inside the transmitter case.

In accordance with FAA regulations, the ELT's battery pack must be replaced after 2 years shelf or service life or for any of the following reasons:

a. After the transmitter has been used in an emergency situation (including any inadvertent activation of unknown duration).
b. After the transmitter has been operated for more than one cumulative hour (e.g. time accumulated in several tests and inadvertent activation of known duration).
c. On or before battery replacement date. Battery replacement date is marked on the battery pack and the label on the transmitter.

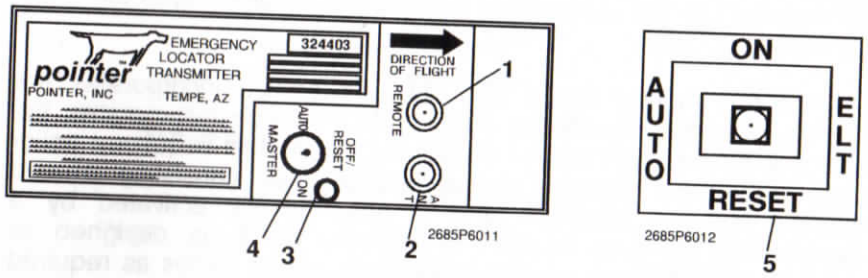

Figure 1. Pointer Model 3000-11 Emergency Locator Transmitter

1. REMOTE CABLE JACK -- Connects to ELT remote switch/annunciator located on the copilot's instrument panel.
2. ANTENNA RECEPTACLE -- Connects to antenna mounted on top of tailcone.
3. TRANSMITTER ANNUNCIATOR LIGHT -- Illuminates red to indicate the transmitter is transmitting a distress signal.
4. MASTER FUNCTION SELECTOR SWITCH (3-position toggle switch):
   AUTO -- Arms transmitter for automatic activation if "G" switch senses a predetermined deceleration level.
   ON -- Activates transmitter instantly. Used for test purposes and if "G" switch is inoperative. The ON position bypasses the automatic activation switch. (The red annunciator in the center of the remote switch/annunciator should illuminate).

   OFF/RESET -- Deactivates transmitter during handling, following rescue and to reset the automatic activation function. (The red annunciator in the center of the remote switch/annunciator should extinguish).
5. REMOTE SWITCH/ANNUNCIATOR (3-position rocker switch):
   ON -- Remotely activates the transmitter for test or emergency situations. Red annunciator in center of rocker switch illuminates to indicate that the transmitter is transmitting a distress signal.
   AUTO -- Arms transmitter for automatic activation if "G" switch senses a predetermined deceleration level.
   RESET -- Deactivates and rearms transmitter after automatic activation by the "G" switch. Red annunciator in center of rocker switch should extinguish.

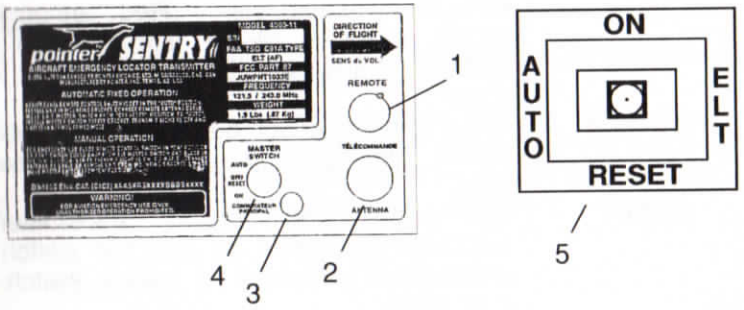

Figure 2. Pointer Model 4000-11 Emergency Locator Transmitter (ELT).

1. REMOTE CABLE JACK -- Connects to ELT remote switch/annunciator located on the copilot's instrument panel.
2. ANTENNA RECEPTACLE -- Connects to antenna mounted on top of tailcone.
3. TRANSMITTER ANNUNCIATOR LIGHT -- Illuminates red to indicate the transmitter is transmitting a distress signal.

4. MASTER FUNCTION SELECTOR SWITCH (3-position toggle switch):
   - ON -- Activates transmitter instantly. Used for test purposes and if "G" switch is inoperative. The ON position bypasses the automatic activation switch. (The red annunciator in the center of the remote switch/annunciator should illuminate).
   - AUTO -- Arms transmitter for automatic activation if "G" switch senses a predetermined deceleration level.
   - OFF/RESET -- Deactivates transmitter during handling, following rescue and to reset the automatic activation function. (The red annunciator in the center of the remote switch/annunciator should extinguish).

5. REMOTE SWITCH/ANNUNCIATOR (3-position rocker switch):
   - ON -- Remotely activates the transmitter for test or emergency situations. Red annunciator in center of rocker switch illuminates to indicate that the transmitter is transmitting a distress signal.
   - AUTO -- Arms transmitter for automatic activation if "G" switch senses a predetermined deceleration level.
   - RESET -- Deactivates and rearms transmitter after automatic activation by the "G" switch. Red annunciator in center of rocker switch should extinguish.

SECTION 2
LIMITATIONS

Refer to Section 2 of the Pilot's Operating Handbook (POH).

SECTION 3
EMERGENCY PROCEDURES

Before performing a forced landing, especially in remote and mountainous areas, activate the ELT transmitter by positioning the remote switch/annunciator to the ON position. The annunciator in center of the rocker switch should be illuminated.

Immediately after a forced landing where emergency assistance is required, the ELT should be utilized as follows:

NOTE

The ELT remote switch/annunciator system could be inoperative if damaged during a forced landing. If inoperative, the inertia "G" switch will activate automatically. However, to turn the ELT OFF and ON again requires manual switching of the master function selector switch which is located on the ELT unit.

1. ENSURE ELT ACTIVATION:
   a. Position remote switch/annunciator to the ON position even if annunciator light is already on.
   b. If airplane radio is operable and can be safely used (no threat of fire or explosion), turn ON and select 121.5 MHz. If the ELT can be heard transmitting, it is working properly.
   c. Ensure that antenna is clear of obstructions.

NOTE

When the ELT is activated, a decreasing tone will be heard before the typical warbling tone begins.

2. PRIOR TO SIGHTING RESCUE AIRCRAFT -- Conserve airplane battery. Do not activate radio transceiver.
3. AFTER SIGHTING RESCUE AIRCRAFT -- Position remote switch/annunciator to the RESET position and release to the AUTO position to prevent radio interference. Attempt contact with rescue aircraft with the radio transceiver set to a frequency of 121.5 MHz. If no contact is established, return the remote switch/annunciator to the ON position immediately.
4. FOLLOWING RESCUE -- Position remote switch/annunciator to the AUTO position, terminating emergency transmissions.

SECTION 4
NORMAL PROCEDURES

As long as the remote switch/annunciator is in the AUTO position and the ELT master function selector switch remains in the AUTO position, the ELT automatically activates when the unit senses longitudinal inertia forces as required in TSO-C91A.

Following a lightning strike, or an exceptionally hard landing, the ELT may activate although no emergency exists. If the remote switch/annunciator illuminates, the ELT has inadvertently activated itself. Another way to check is to select 121.5 MHz on the radio transceiver and listen for an emergency tone transmission. If the remote switch/annunciator is illuminated or an emergency tone is heard, position the remote switch/annunciator in the RESET position and release to the AUTO position.

The ELT must be serviced in accordance with FAR Part 91.207.

INSPECTION/TEST

1. The emergency locator transmitter should be tested every 100 hours.

NOTE

Test should only be conducted within the first 5 minutes of each hour.

2. Disconnect antenna cable from ELT.
3. Turn airplane battery switch and avionics power switches ON.
4. Turn airplane transceiver ON and set frequency to 121.5 MHz.
5. Place remote switch/annunciator in the ON position. The annunciator should illuminate. Permit **only three** emergency tone transmissions, then immediately reposition the remote switch/annunciator to the RESET position and release to the AUTO position.
6. Place the ELT master function selector switch in the ON position. Verify that the transmitter annunciator light on the ELT and the remote switch/annunciator on the instrument panel are illuminated.

7. Place the ELT master function selector switch in the OFF/RESET position.
8. Reposition ELT master function selector switch to AUTO.
9. Reconnect antenna cable to ELT.

⚠ WARNING

A TEST WITH THE ANTENNA CONNECTED SHOULD BE APPROVED AND CONFIRMED BY THE NEAREST CONTROL TOWER.

NOTE

Without its antenna connected, the ELT will produce sufficient signal to reach the airplane transceiver, yet it will not disturb other communications or damage output circuitry.

After accumulated test or operation time equals 1 hour, battery pack replacement is required.

IN-FLIGHT MONITORING AND REPORTING

Pilot's are encouraged to monitor 121.5 MHz and/or 243.0 MHz while in flight to assist in identifying possible emergency ELT transmissions. On receiving a signal, report the following information to the nearest air traffic control facility:

1. Your position at the time the signal was first heard.
2. Your position at the time the signal was last heard.
3. Your position at maximum signal strength.
4. Your flight altitude and frequency on which the emergency signal was heard -- 121.5 MHz or 243.0 MHz. If possible, positions should be given relative to a navigation aid. If the aircraft has homing equipment, provide the bearing to the emergency signal with each reported position.

SECTION 5
PERFORMANCE

There is no change in airplane performance when the ELT is installed.

Cessna
A Textron Company

Pilot's Operating Handbook and FAA Approved Airplane Flight Manual

CESSNA MODEL 172S

AIRPLANES 172S8001 AND ON

SUPPLEMENT 5

BENDIX/KING KLN 89B GLOBAL POSITIONING SYSTEM (IFR)

SERIAL NO. _____

REGISTRATION NO. _____

This supplement must be inserted into Section 9 of the Pilot's Operating Handbook and FAA Approved Airplane Flight Manual when the Global Positioning System is installed.

FAA APPROVAL
FAA APPROVED UNDER FAR 21 SUBPART J
The Cessna Aircraft Co
Delegation Option Manufacturer CE-1
Executive Engineer
Date: 27 June 2000

Member of GAMA

8 July 1998

Revision 2 - 30 May 2000

COPYRIGHT © 1998
CESSNA AIRCRAFT COMPANY
WICHITA, KANSAS, USA

172SPHUS 98-02

SUPPLEMENT 5

BENDIX/KING KLN 89B GLOBAL POSITIONING SYSTEM (IFR)

The following Log of Effective Pages provides the date of issue for original and revised pages, as well as a listing of all pages in the Supplement. Pages which are affected by the current revision will carry the date of that revision

Revision Level	Date of Issue
0 (Original)	July 8, 1998
1	May 21, 1999
2	May 30, 2000

LOG OF EFFECTIVITY PAGES

PAGE	DATE	PAGE	DATE
Title (S5-1)	May 30/00	S5-11	May 21/99
S5-2	May 30/00	S5-12	May 21/99
S5-3	May 21/99	S5-13	May 21/99
S5-4	May 21/99	S5-14	May 21/99
S5-5	May 21/99	S5-15	May 21/99
S5-6	May 21/99	S5-16	May 21/99
S5-7	May 21/99	S5-17	May 21/99
S5-8	May 21/99	S5-18	May 21/99
S5-9	May 21/99	S5-19	May 21/99
S5-10	May 21/99	S5-20 blank	May 21/99

SUPPLEMENT 5

BENDIX/KING KLN 89B GLOBAL POSITIONING SYSTEM (IFR)

I

SERVICE BULLETIN CONFIGURATION LIST

The following is a list of Service Bulletins that are applicable to the operation of the airplane, and have been incorporated into this supplement. This list contains only those Service Bulletins that are currently active.

Number	Title	Airplane Unit Effectivity	Revision Incorporation	Incorporated In Airplane

SUPPLEMENT

BENDIX/KING KLN 89B GPS NAVIGATION SYSTEM (IFR)

SECTION 1 GENERAL

⚠ WARNING

THE KLN 89B IS NOT AUTHORIZED FOR INSTRUMENT APPROACHES UNLESS THE OPERATIONAL REVISION STATUS IS UPGRADED TO "ORS 02" OR LATER, AS READ ON THE POWER-ON PAGE, AND THE HOST SOFTWARE IS UPGRADED TO "HOST 00880-0004" OR LATER, AS READ ON THE KLN 89B OTH 6 PAGE.

The KLN 89B GPS (Global Positioning System) is a three-dimensional precision navigation system based on 24 earth orbiting satellites. Receiver Autonomous Integrity Monitoring (RAIM) is a function that every IFR-certified GPS receiver must continuously perform to assure position accuracy. RAIM is available when 5 or more of these satellites are in view, or 4 satellites are in view and a barometrically corrected altitude input from the airplane's altimeter is made. Annunciation is provided if there are not enough satellites in view to assure position integrity.

Operational guidance for the KLN 89B GPS Navigation System is provided with the Bendix/King KLN 89B Pilot's Guide (supplied with the airplane). This Pilot's Guide should be thoroughly studied and VFR operations conducted so that you are totally familiar with the GPS system of navigation before actually using this equipment in IFR conditions.

The database card is an electronic memory containing information on airports, navaids, intersections, SID's, STAR's, instrument approaches, special use airspace, and other items of interest to the pilot.

Every 28 days, Bendix/King receives new database information from Jeppesen Sanderson for the North American database region. This information is processed and downloaded onto the database cards. Bendix/King makes these database card updates available to KLN 89B GPS users.

⚠ CAUTION

THE DATABASE MUST BE UPDATED ONLY WHILE THE AIRCRAFT IS ON THE GROUND. THE KLN 89B DOES NOT PERFORM ANY NAVIGATION FUNCTION WHILE THE DATABASE IS BEING UPDATED.

NOTE

A current database is required by regulation in order to use the KLN 89B GPS system for nonprecision approaches.

Provided the KLN 89B navigation system is receiving adequate usable signals, it has been demonstrated capable of and has been shown to meet the accuracy specifications of: VFR/IFR en route oceanic and remote, en route domestic, terminal, and instrument approach (GPS, Loran-C, VOR, VOR-DME, TACAN, NDB, NDB-DME, RNAV) operation within the U.S. National Airspace System, North Atlantic Minimum Navigation Performance Specifications (MNPS) Airspace and latitudes bounded by 74° North and 60° South using the WGS-84 (or NAD 83) coordinate reference datum in accordance with the criteria of AC 20-138, AC 91-49, and AC 120-33. Navigation data is based upon use of only the global positioning system (GPS) operated by the United States.

NOTE

Aircraft using GPS for oceanic IFR operations may use the KLN 89B to replace one of the other approved means of long range navigation. A single KLN 89B GPS installation may also be used on short oceanic routes which require only one means of long-range navigation.

NOTE

FAA approval of the KLN 89B does not necessarily constitute approval for use in foreign airspace.

NOTE

When the KLN 89B contains receiver software RCVR 01621-0001 (or higher dash number), as verified on the **OTH 6** page, the unit is qualified for BRNAV (Basic Area Navigation) operation in the European region in accordance with the criteria of AC 90-96. (Reference ICAO Doc 7030 Regional Supplementary Procedures, JAA Technical Guidance Leaflet AMJ20X2 and Eurocontrol RNAV Standard Doc 003-93 Area Navigation Equipment Operational Requirements and Functional Requirements (RNAV).)

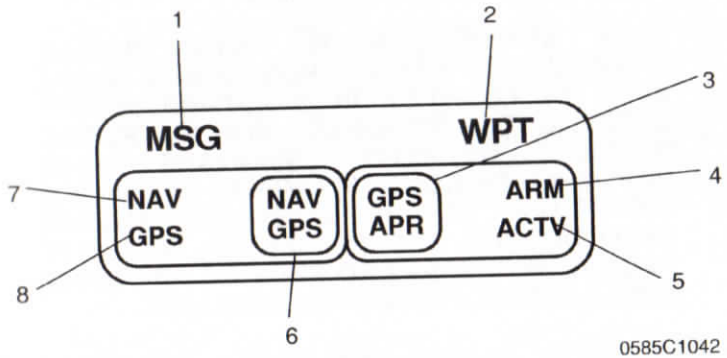

1. GPS MESSAGE **(MSG)** ANNUNCIATOR LIGHT -- **MSG** will begin flashing whenever the message prompt (a large "M" on the left side of the screen) on the KLN 89B GPS unit begins flashing to alert the pilot that a message is waiting. Press the Message (**MSG**) key on the GPS to display the message. If a message condition exists which requires a specific action by the pilot, the message annunciator will remain on but will not flash.

2. GPS WAYPOINT **(WPT)** ANNUNCIATOR LIGHT -- GPS WAYPOINT annunciator will begin to flash approximately 36 seconds prior to reaching a Direct-To waypoint. Also, when turn anticipation is enabled in the KLN 89B GPS unit, the annunciator will begin to flash 20 seconds prior to the beginning of turn anticipation, then illuminate steady at the very beginning of turn anticipation.

Figure 1. GPS Annunciator/Switch (Sheet 1 of 3)

⚠ WARNING

TURN ANTICIPATION IS AUTOMATICALLY DISABLED FOR FAF WAYPOINTS AND THOSE USED EXCLUSIVELY IN SID/STARS WHERE OVERFLIGHT IS REQUIRED. FOR WAYPOINTS SHARED BETWEEN SID/STARS AND PUBLISHED EN ROUTE SEGMENTS (REQUIRING OVERFLIGHT IN THE SID/STARS), PROPER SELECTION ON THE PRESENTED WAYPOINT PAGE IS NECESSARY TO PROVIDE ADEQUATE ROUTE PROTECTION ON THE SID/STARS.

3. GPS APPROACH (**GPS**, **APR**) SWITCH -- Pressing the GPS APPROACH switch manually selects or disarms the approach **ARM** mode and also cancels the approach **ACTV** mode after being automatically engaged by the KLN 89B GPS system. The white background color of the GPS APPROACH annunciator makes it visible in daylight.

4. **ARM** ANNUNCIATOR LIGHT -- **ARM** annunciator will illuminate when the KLN 89B GPS system automatically selects the approach ARM mode or when the approach ARM mode is manually selected. The approach ARM mode will be automatically selected when the airplane is within 30 NM of an airport, and an approach is loaded in the flight plan for that airport. The approach ARM mode can manually be selected at a greater distance than 30 NM from the airport by pressing the GPS APPROACH switch; however, this will not change the CDI scale until the airplane reaches the 30 NM point. The approach ARM mode can also be disarmed by pressing the GPS APPROACH switch.

5. ACTIVE (**ACTV**) ANNUNCIATOR LIGHT -- **ACTV** annunciator will illuminate when the KLN 89B GPS system automatically engages the approach ACTV mode (the ACTV mode can only be engaged by the KLN 89B GPS system which is automatic.) To cancel the approach ACTV mode, press the GPS APPROACH switch; this will change the mode to the approach ARM mode and illuminate the **ARM** annunciator.

Figure 1. GPS Annunciator/Switch (Sheet 2 of 3)

6. **NAV/GPS** SWITCH -- Toggles from Nav 1 to GPS and vice versa to control the type of navigation data to be displayed on the CDI (Course Deviation Indicator). The No. 1 CDI Omni Bearing Selector (OBS) provides analog course input to the KLN 89B in OBS mode when the **NAV/GPS** switch/annunciator is in **GPS**. When the **NAV/GPS** switch annunciation is in **NAV**, GPS course selection in OBS mode is digital through the use of the controls and display at the KLN 89B.

NOTE

Manual CDI course centering in **OBS** mode using the control knob can be difficult, especially at long distances. Centering the Course Deviation Indicator (CDI) needle can best be accomplished by pressing the Direct-To button and then manually setting the No. 1 CDI course to the course value prescribed in the KLN 89B displayed message.

NOTE

The Directional Gyro heading (HDG) bug must also be set to provide proper course datum to the autopilot if coupled to the KLN 89B in **LEG** or **OBS**. (When the optional HSI is installed, the HSI course pointer provides course datum to the autopilot.)

7. NAVIGATION SOURCE (**NAV**) ANNUNCIATOR -- The **NAV** annunciator will illuminate steady to inform the pilot that NAV 1 information is being displayed on the NAV 1 CDI.

8. NAVIGATION SOURCE (**GPS**) ANNUNCIATOR -- The **GPS** annunciator will illuminate steady to inform the pilot that GPS information is being displayed on the NAV 1 CDI.

Figure 1. GPS Annunciator/Switch (Sheet 3 of 3)

SECTION 2
LIMITATIONS

1. The KLN 89B GPS Pilot's Guide, P/N 006-08786-0000, dated May, 1995 (or later applicable revision) must be available to the flight crew whenever IFR GPS navigation is used. The Operational Revision Status (ORS) of the Pilot's Guide must match the ORS level annunciated on the Self Test page.

2. IFR Navigation is restricted as follows:

   a. The system must utilize ORS level 01 or later FAA approved revision.

   b. The data on the self test page must be verified prior to use.

   c. IFR en route and terminal navigation is prohibited unless the pilot verifies the currency of the database or verifies each selected waypoint for accuracy by reference to current approved data.

   d. The system must utilize ORS Level 02 or later FAA approved revision to conduct nonprecision instrument approaches. In addition, the software level status found on page OTH 6 must be "HOST 00880-0004" or later. Instrument approaches must be accomplished in accordance with approved instrument approach procedures that are retrieved from the KLN 89B database. The KLN 89B database must incorporate the current update cycle.

      1) The KLN 89B Quick Reference, P/N 006-08787-0000, dated 5/95 (or later applicable to revision) must be available to the flight crew during instrument approach operations.

      2) Instrument approaches must be conducted in the approach mode and RAIM must be available at the Final Approach Fix.

      3) APR ACTV mode must be annunciated at the Final Approach Fix.

      4) Accomplishment of ILS, LOC, LOC-BC, LDA, SDF, and MLS approaches are not authorized.

      5) When an alternate airport is required by the applicable operating rules, it must be served by an approach based on other than GPS or Loran-C navigation.

      6) The KLN 89B can only be used for approach guidance if the reference coordinate datum system for the instrument approach is WGS-84 or NAD-83. (All approaches in the KLN 89B database use the WGS-84 or the NAD-83 geodetic datum).

   e. For BRNAV operations in the European region:

      1) With 23 (24 if the altitude input to the KLN 89B is not available) or more satellites projected to be operational for the flight, the aircraft can depart without further action.

      2) With 22 (23 if the altitude input to the KLN 89B is not available) or fewer satellites projected to be operational for the flight, the availability of the GPS integrity (RAIM) should be confirmed for the intended flight (route and time). This should be obtained from a prediction program run outside of the aircraft. The prediction program must comply with the criteria of Appendix 1 of AC90-96. In the event of a predicted continuous loss of RAIM of more than 5 minutes for any part of the intended flight, the flight should be delayed, cancelled, or rerouted on a track where RAIM requirements can be met.

NOTE

AlliedSignal's Preflight, Version 2.0 or later computer based prediction program may be used for the RAIM prediction. Alternate methods should be submitted for approval in accordance with Advisory Circular AC90-96.

f. The aircraft must have other approved navigation equipment appropriate to the route of flight installed and operational.

SECTION 3
EMERGENCY PROCEDURES

There are no changes to the basic airplane emergency procedures when the KLN 89B GPS is installed.

1. If the KLN 89B GPS information is not available or invalid, utilize remaining operational navigation equipment as required.

2. If a "RAIM NOT AVAILABLE" message is displayed while conducting an instrument approach, terminate the approach. Execute a missed approach if required.

3. If a "RAIM NOT AVAILABLE" message is displayed in the en route or terminal phase of flight, continue to navigate using the KLN 89B or revert to an alternate means of navigation appropriate to the route and phase of flight. When continuing to use the KLN 89B for navigation, position must be verified every 15 minutes using another IFR approved navigation system.

4. Refer to the KLN 89B Pilot's Guide, Appendices B and C, for appropriate pilot actions to be accomplished in response to annunciated messages.

SECTION 4
NORMAL PROCEDURES

OPERATION

Normal operating procedures are outlined in the KLN 89B GPS Pilot's Guide, P/N 006-08786-0000, dated May, 1995, (or later applicable revision). A KLN 89B Quick Reference, P/N 006-08787-0000, dated May, 1995 (or later applicable revision) containing an approach sequence, operating tips and approach related messages is intended as well for cockpit use by the pilot familiar with KLN 89B operations when conducting instrument approaches.

⚠ WARNING

TO PREVENT THE POSSIBILITY OF TURN ANTICIPATION CAUSING POTENTIALLY MISLEADING NAVIGATION WHEN THE AIRCRAFT IS NOT ON COURSE, VERIFY THE CDI COURSE AND CDI NEEDLE PRESENTATION IS PROPER PRIOR TO TAKEOFF AND DO NOT SWITCH FROM OBS TO LEG WITH GREATER THAN 1 NM CROSS TRACK ERROR (XTK).

IF MISLEADING DATA IS SUSPECTED, A DIRECT-TO OPERATION TO YOUR DESIRED WAYPOINT WILL CLEAR ANY PREVIOUS OBS COURSE, AND CANCEL TURN ANTICIPATION.

NOTE

After the above Direct-To operation, further reorientation to the nearest leg of the active flight plan may be accomplished by pressing the Direct-To button followed by pressing the Clear button and finally the Enter Button.

Refer to the Pilot's Guide section 4.2.2 for an explanation of turn anticipation, and Appendix A - Navigation Terms for the definition of cross track error (XTK).

AUTOPILOT COUPLED OPERATION

The KLN 89B may be coupled to the KAP 140 autopilot by first selecting **GPS** on the NAV/GPS switch. Manual selection of the desired track on the pilot's DG heading bug is required to provide course datum to the KAP 140 autopilot. (Frequent course datum changes may be necessary, such as in the case of flying a DME arc.) The autopilot approach mode (APR) should be used when conducting a coupled GPS approach.

NOTE

Select HDG mode for DME arc intercepts. NAV or APR coupled DME arc intercepts can result in excessive overshoots (aggravated by high ground speeds and/or intercepts from inside the arc).

APPROACH MODE SEQUENCING AND RAIM PREDICTION

⚠ WARNING

FAMILIARITY WITH THE EN ROUTE OPERATION OF THE KLN 89B WILL NOT CONSTITUTE PROFICIENCY IN APPROACH OPERATIONS. APPROACH OPERATIONS SHOULD NOT BE ATTEMPTED IN IMC (INSTRUMENT METEOROLOGICAL CONDITIONS) PRIOR TO ATTAINING PROFICIENCY IN VMC (VISUAL METEOROLOGICAL CONDITIONS).

NOTE

The special use airspace alert will automatically be disabled prior to flying an instrument approach to reduce the potential for message congestion.

1. Prior to arrival, select a STAR if appropriate from the **APT 7** page. Select an approach and an initial approach fix (IAF) from the **APT 8** page.

NOTE

Using the outer knob, select the **ACT** (Active Flight Plan Waypoints) pages. Pull the inner knob out and scroll to the destination airport, then push the inner knob in and select the **ACT 7** or **ACT 8** page.

To delete or replace a SID, STAR or approach, select **FPL 0** page. Place the cursor over the name of the procedure, press **ENT** to change it, or **CLR** then **ENT** to delete it.

2. En route, check for RAIM availability at the destination airport ETA on the **OTH 3** page.

NOTE

RAIM must be available at the FAF in order to fly an instrument approach. Be prepared to terminate the approach upon loss of RAIM.

3. At or within 30 nm from the airport:

   a. Verify automatic annunciation of APRARM.
   b. Note automatic CDI needle scaling change from ±5.0 nm to ±1.0 nm over the next 30 seconds.
   c. Update the KLN 89B altimeter baro setting as required.
   d. Internally the KLN 89B will transition from en route to terminal integrity monitoring.

4. Select **NAV 4** page to fly the approach procedure.

   a. If receiving radar vectors, or need to fly a procedure turn or holding pattern, fly in OBS until inbound to the FAF.

NOTE

OBS navigation is TO-FROM (like a VOR) without waypoint sequencing.

⚠ WARNING

TO PREVENT THE POSSIBILITY OF TURN ANTICIPATION CAUSING POTENTIALLY MISLEADING NAVIGATION WHEN THE AIRCRAFT IS NOT ON COURSE, DO NOT SWITCH FROM OBS TO LEG WITH GREATER THAN 1 NM CROSS TRACK ERROR (XTK).

   b. **NoPT** routes including DME arc's are flown in **LEG**. **LEG** is mandatory from the FAF to the MAP.

NOTE

Select HDG mode for DME arc intercepts. NAV or APR coupled DME arc intercepts can result in excessive overshoots (aggravated by high ground speeds and/or intercepts from inside the arc).

⚠ WARNING

FLYING FINAL OUTBOUND FROM AN OFF-AIRPORT VORTAC ON AN OVERLAY APPROACH; BEWARE OF THE DME DISTANCE INCREASING ON FINAL APPROACH, AND THE GPS DISTANCE-TO-WAYPOINT DECREASING, AND NOT MATCHING THE NUMBERS ON THE APPROACH PLATE.

5. At or before 2 nm from the FAF inbound:

   a. Select the FAF as the active waypoint, if not accomplished already.
   b. Select LEG operation.

6. Approaching the FAF inbound (within 2 nm):

   a. Verify APR ACTV.
   b. Note automatic CDI needle scaling change from ±1.0 nm to ±0.3 nm over the 2 nm inbound to the FAF.
   c. Internally the KLN 89B will transition from terminal to approach integrity monitoring.

7. Crossing the FAF and APR ACTV is not annunciated:

   a. Do not descend.
   b. Execute the missed approach.

8. Missed Approach:

   a. Climb.
   b. Navigate to the MAP (in APRARM if APR ACTV is not available).

NOTE

There is no automatic LEG sequencing at the MAP.

   c. After climbing in accordance with the published missed approach procedure, press the Direct To button, verify or change the desired holding fix and press **ENT**.

GENERAL NOTES

- The database must be up to date for instrument approach operation.
- Only one approach can be in the flight plan at a time.
- Checking RAIM prediction for your approach while en route using the **OTH 3** page is recommended. A self check occurs automatically within 2 nm of the FAF. APR **ACTV** is inhibited without RAIM.
- Data cannot be altered, added to or deleted from the approach procedures contained in the database. (DME arc intercepts may be relocated along the arc through the **NAV 4** or the **FPL 0** pages).
- **Some approach waypoints do not appear on the approach plates (including in some instances the FAF).**

- Waypoint suffixes in the flight plan:
  - i -- IAF
  - f -- FAF
  - m -- MAP
  - h -- missed approach holding fix.

•The DME arc IAF (arc intercept waypoint) will be on your present position radial off the arc VOR when you load the IAF into the flight plan, or the beginning of the arc if currently on a radial beyond the arc limit. To adjust the arc intercept to be compatible with a current radar vector, bring up the arc IAF waypoint in the **NAV 4** page scanning field or under the cursor on the **FPL 0** page, press **CLR**, then **ENT**. Fly the arc in LEG. Adjust the heading bug (if autopilot coupled) and CDI course with reference to the desired track value on the **NAV 4** page (it will flash to remind you). Left/right CDI needle information is relative to the arc. Displayed distance is not along the arc but direct to the active waypoint. (The DME arc radial is also displayed in the lower right corner of the **NAV 4** page.)

- The DME arc IAF identifier may be unfamiliar. Example: D098G where 098 stands for the 098° radial off the referenced VOR, and G is the seventh letter in the alphabet indicating a 7 DME arc.

- APRARM to APR **ACTV** is automatic provided that:

a. You are in APRARM (normally automatic).
b. You are in **LEG** mode.
c. The **FAF** is the active waypoint.
d. Within 2 nm of the FAF.
e. Outside of the FAF.
f. Inbound to the FAF.
g. RAIM is available.

- Direct-To operation between the FAF and MAP cancels APR **ACTV**. Fly the missed approach in APRARM.

- Flagged navigation inside the FAF may usually be restored (not guaranteed) by pressing the GPS APR button changing from **ACTV** to **ARM**. Fly the missed approach.

- The instrument approach using the KLN 89B may be essentially automatically started 30 nm out (with a manual baro setting update) or it may require judicious selection of the OBS and LEG modes.

- APRARM may be canceled at any time by pressing the GPS APR button. (A subsequent press will reselect it.)

SECTION 5
PERFORMANCE

There is no change to the airplane performance when this avionics equipment is installed. However, installation of an externally-mounted antenna or related external antennas, may result in a minor reduction in cruise performance.

Cessna
A Textron Company

Pilot's Operating Handbook and FAA Approved Airplane Flight Manual

CESSNA MODEL 172S

AIRPLANES 172S8001 AND ON

SUPPLEMENT 6

BENDIX/KING KR87 AUTOMATIC DIRECTION FINDER (ADF)

SERIAL NO. _____

REGISTRATION NO. _____

This supplement must be inserted into Section 9 of the Pilot's Operating Handbook and FAA Approved Airplane Flight Manual when the Automatic Direction Finder is installed.

FAA APPROVAL
FAA APPROVED UNDER FAR 21 SUBPART J
The Cessna Aircraft Co
Delegation Option Manufacturer CE-1
Executive Engineer
Date: 27 June 2000

Member of GAMA

8 July 1998

Revision 1 - 30 May 2000

COPYRIGHT © 1998
CESSNA AIRCRAFT COMPANY
WICHITA, KANSAS, USA

172SPHUS-S6-01

SUPPLEMENT 6

BENDIX/KING KR 87 AUTOMATIC DIRECTION FINDER (ADF)

The following Log of Effective Pages provides the date of issue for original and revised pages, as well as a listing of all pages in the Supplement. Pages which are affected by the current revision will carry the date of that revision

Revision Level	Date of Issue
0 (Original)	July 8, 1998
1	May 30, 2000

LOG OF EFFECTIVITY PAGES

PAGE	DATE	PAGE	DATE
Title (S6-1)	May 30/00	S6-7	July 8/98
S6-2	May 30/00	S6-8	July 8/98
S6-3	May 30/00	S6-9	July 8/98
S6-4	July 8/98	S6-10	July 8/98
S6-5	July 8/98	S6-11	July 8/98
S6-6	May 30/00	S6-12	July 8/98

SERVICE BULLETIN CONFIGURATION LIST

The following is a list of Service Bulletins that are applicable to the operation of the airplane, and have been incorporated into this supplement. This list contains only those Service Bulletins that are currently active.

Number	Title	Airplane Unit Effectivity	Revision Incorporation	Incorporated In Airplane

SUPPLEMENT

BENDIX/KING KR 87 AUTOMATIC DIRECTION FINDER (ADF)

SECTION 1
GENERAL

The Bendix/King Digital ADF is a panel-mounted, digitally tuned automatic direction finder. It is designed to provide continuous 1-kHz digital tuning in the frequency range of 200-kHz to 1799-kHz and eliminates the need for mechanical band switching. The system is comprised of a receiver, a built-in electronics timer, a bearing indicator, and a KA-44B combined loop and sense antenna. Operating controls and displays for the Bendix/King Digital ADF are shown and described in Figure 1. The audio system used in conjunction with this radio for speaker-phone selection is shown and described in Supplement 3 of this handbook.

The Bendix/King Digital ADF can be used for position plotting and homing procedures, and for aural reception of amplitude-modulated (AM) signals.

The "flip-flop" frequency display allows switching between pre-selected "STANDBY" and "ACTIVE" frequencies by pressing the frequency transfer button. Both pre-selected frequencies are stored in a non-volatile memory circuit (no battery power required) and displayed in large, easy-to-read, self-dimming gas discharge numerics. The active frequency is continuously displayed in the left window, while the right window will display either the standby frequency or the selected readout from the built-in electronic timer.

The built-in electronic timer has two separate and independent timing functions. An automatic flight timer that starts whenever the unit is turned on. This timer functions up to 59 hours and 59 minutes. An elapsed timer which will count up or down for up to 59 minutes and 59 seconds. When a preset time interval has been programmed and the countdown reaches :00, the display will flash for 15 seconds. Since both the flight timer and elapsed timer operate independently, it is possible to monitor either one without disrupting the other. The pushbutton controls and the bearing indicators are internally lighted. Intensity is controlled by the RADIO light dimming rheostat.

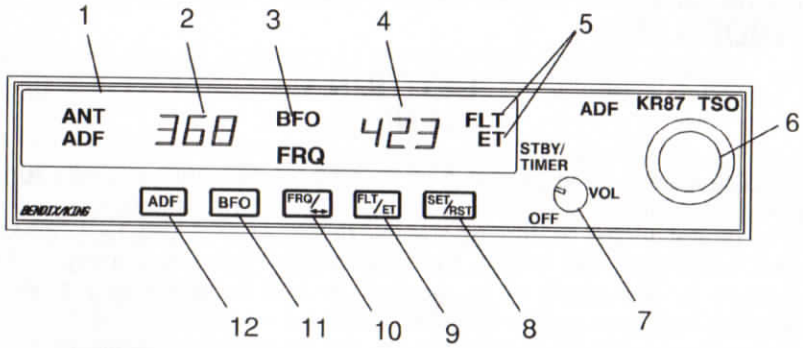

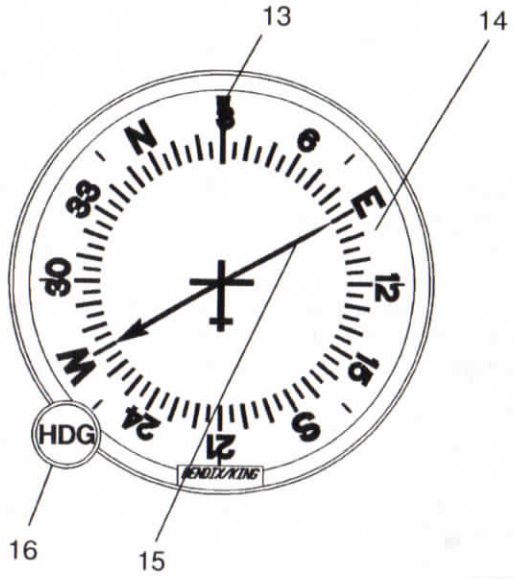

0585C1043
0585C1044

Figure 1. KR 87 Automatic Direction Finder (ADF) (Sheet 1 of 4)

1. ANT/ADF MODE ANNUNCIATOR -- Antenna (ANT) is selected by the "out" position of the ADF button. This mode improves the audio reception and is usually used for station identification. The bearing pointer is deactivated and will park in the 90° relative position. Automatic Direction Finder (ADF) mode is selected by the depressed position of the ADF button. This mode activates the bearing pointer. The bearing pointer will point in the direction of the station relative to the aircraft heading.

2. IN-USE FREQUENCY DISPLAY -- The frequency to which the ADF is tuned is displayed here. The active ADF frequency can be changed directly when either of the timer functions is selected.

3. BFO (Beat Frequency Oscillator) ANNUNCIATOR -- The BFO mode, activated and annunciated when the "BFO" button is depressed, permits the carrier wave and associated morse code identifier broadcast on the carrier wave to be heard.

NOTE

CW signals (Morse Code) are unmodulated and no audio will be heard without use of BFO. This type of signal is not used in the United States air navigation. It is used in some foreign countries and marine beacons.

4. STANDBY FREQUENCY/FLIGHT TIME OR ELAPSED TIME ANNUNCIATION -- When FRQ is displayed the STANDBY frequency is displayed in the right hand display. The STANDBY frequency is selected using the frequency select knobs. The selected STANDBY frequency is put into the ACTIVE frequency windows by pressing the frequency transfer button. Either the standby frequency, the flight timer, or the elapsed time is displayed in this position. The flight timer and elapsed timer are displayed replacing the standby frequency which goes into "blind" memory to be called back at any time by depressing the FRQ button. Flight time or elapsed time are displayed and annunciated alternatively by depressing the FLT/ET button.

Figure 1. KR 87 Automatic Direction Finder (ADF) (Sheet 2 of 4)

5. FLIGHT TIMER AND ELAPSED TIMER MODE ANNUNCIATION -- Either the elapsed time (ET) or flight time (FLT) mode is annunciated here.

6. FREQUENCY SELECT KNOBS -- Selects the standby frequency when FRQ is displayed and directly selects the active frequency whenever either of the time functions is selected. The frequency selector knobs may be rotated either clockwise or counterclockwise. The small knob is pulled out to tune the 1's. The small knob is pushed in to tune the 10's. The outer knob tunes the 100's with rollover into the 1000's up to 1799. These knobs are also used to set the desired time when the elapsed timer is used in the countdown mode.

7. ON/OFF/VOLUME CONTROL SWITCH (ON/OFF/VOL) -- Controls primary power and audio output level. Clockwise rotation from OFF position applies primary power to the receiver; further clockwise rotation increases audio level. Audio muting causes the audio output to be muted unless the receiver is locked on a valid station.

8. SET/RESET ELAPSED TIMER BUTTON (SET/RST) -- The set/reset button when pressed resets the elapsed timer whether it is being displayed or not.

9. FLIGHT TIMER/ELAPSED TIMER MODE SELECTOR BUTTON (FLT/ET) -- The Flight Timer/Elapsed Time mode selector button when pressed alternatively selects either Flight Timer mode or Elapsed Timer mode.

Figure 1. KR 87 Automatic Direction Finder (ADF) (Sheet 3 of 4)

10. FREQUENCY TRANSFER BUTTON (FRQ) -- The FRQ transfer button when pressed exchanges the active and standby frequencies. The new frequency becomes active and the former active frequency goes into standby.

11. BFO (Beat Frequency Oscillator) BUTTON -- The BFO button selects the BFO mode when in the depressed position. (See note under item 3).

12. ADF BUTTON -- The ADF button selects either the ANT mode or the ADF mode. The ANT mode is selected with the ADF button in the out position. The ADF mode is selected with the ADF button in the depressed position.

13. LUBBER LINE -- Indicates relative or magnetic heading of the aircraft. The heading must be manually input by the pilot with the heading (HDG) knob.

14. COMPASS CARD -- Manually rotatable card that indicates relative or magnetic heading of aircraft, as selected by HDG knob.

15. BEARING POINTER -- Indicates relative or magnetic bearing to station as selected by HDG knob. If the relative heading of North (N) is manually selected under the lubber line by the pilot, then the bearing pointer indicates the relative bearing to the station. If the aircraft's magnetic heading is selected under the lubber line by the pilot, then the bearing pointer indicates the magnetic bearing to the station.

16. HEADING KNOB (HDG) -- Rotates card to set in relative or magnetic heading of aircraft.

Figure 1. KR 87 Automatic Direction Finder (ADF) (Sheet 4 of 4)

SECTION 2
LIMITATIONS

There is no change to airplane limitations when the KR 87 ADF is installed.

SECTION 3
EMERGENCY PROCEDURES

There are no changes to the basic airplane emergency procedures when the KR 87 ADF is installed.

SECTION 4
NORMAL PROCEDURES

TO OPERATE AS AN AUTOMATIC DIRECTION FINDER:

1. OFF/VOL Control -- ON.
2. Frequency Selector Knobs -- SELECT desired frequency in the standby frequency display.
3. FRQ Button -- PRESS to move the desired frequency from the standby to the active position.
4. ADF Selector Switch (on audio control panel) -- SELECT as desired.
5. OFF/VOL Control -- SET to desired volume level and identify that desired station is being received.
6. ADF Button -- SELECT ADF mode and note relative bearing on indicator.

ADF TEST (PRE-FLIGHT or IN-FLIGHT):

1. ADF Button -- SELECT ANT mode and note pointer moves to 90° position.
2. ADF Button -- SELECT ADF mode and note the pointer moves without hesitation to the station bearing. Excessive pointer sluggishness, wavering or reversals indicate a signal that is too weak or a system malfunction.

TO OPERATE BFO:

1. OFF/VOL Control -- ON.
2. BFO Button -- PRESS on.
3. ADF Selector Buttons (on audio control panel) -- SET to desired mode.
4. VOL Control -- ADJUST to desired listening level.

NOTE

A 1000-Hz tone and Morse Code identifier is heard in the audio output when a CW signal is received.

TO OPERATE FLIGHT TIMER:

1. OFF/VOL Control -- ON.
2. FLT/ET Mode Button -- PRESS (once or twice) until FLT is annunciated. Timer will already be counting since it is activated by turning the unit on.
3. OFF/VOL Control -- OFF and then ON if it is desired to reset the flight timer.

TO OPERATE AS A COMMUNICATIONS RECEIVER ONLY:

1. OFF/VOL Control -- ON.
2. ADF Button -- SELECT ANT mode.
3. Frequency Selector Knobs -- SELECT desired frequency in the standby frequency display.
4. FRQ Button -- PRESS to move the desired frequency from the standby to the active position.
5. ADF Selector Buttons (on audio control panel) -- SET to desired mode.
6. VOL Control -- ADJUST to desired listening level.

TO OPERATE ELAPSED TIME TIMER-COUNT UP MODE:

1. OFF/VOL Control -- ON.
2. FLT/ET Mode Button -- PRESS (once or twice) until ET is annunciated.
3. SET/RST Button -- PRESS momentarily to reset elapsed timer to zero.

NOTE

The Standby Frequency which is in memory while Flight Time or Elapsed Time modes are being displayed may be called back by pressing the FRQ button, then transferred to active use by pressing the FRQ button again.

TO OPERATE ELAPSED TIME TIMER-COUNT DOWN MODE:

1. OFF/VOL Control -- ON.
2. FLT/ET Mode Button -- PRESS (once or twice) until ET is annunciated.
3. SET/RST Button -- PRESS until the ET annunciation begins to flash.
4. FREQUENCY SELECTOR KNOBS -- SET desired time in the elapsed time display. The small knob is pulled out to tune the 1's. The small knob is pushed in to tune the 10's. The outer knob tunes minutes up to 59 minutes.

NOTE

Selector knobs remain in the time set mode for 15 seconds after the last entry or until the SET/RST, FLT/ET or FRQ button is pressed.

5. SET/RST Button -- PRESS to start countdown. When the timer reaches 0, it will start to count up as display flashes for 15 seconds.

NOTE

While FLT or ET are displayed, the active frequency on the left side of the window may be changed, by using the frequency selector knobs, without any effect on the stored standby frequency or the other modes.

ADF OPERATION NOTES:

ERRONEOUS ADF BEARING DUE TO RADIO FREQUENCY PHENOMENA:

In the U.S., the FCC, which assigns AM radio frequencies, occasionally will assign the same frequency to more than one station in an area. Certain conditions, such as Night Effect, may cause signals from such stations to overlap. This should be taken into consideration when using AM broadcast station for navigation.

Sunspots and atmospheric phenomena may occasionally distort reception so that signals from two stations on the same frequency will overlap. For this reason, it is always wise to make positive identification of the station being tuned, by switching the function selector to ANT and listening for station call letters.

ELECTRICAL STORMS:

In the vicinity of electrical storms, an ADF indicator pointer tends to swing from the station tuned toward the center of the storm.

NIGHT EFFECT:

This is a disturbance particularly strong just after sunset and just after dawn. An ADF indicator pointer may swing erratically at these times. If possible, tune to the most powerful station at the lowest frequency. If this is not possible, take the average of pointer oscillations to determine relative station bearing.

MOUNTAIN EFFECT:

Radio waves reflecting from the surface of mountains may cause the pointer to fluctuate or show an erroneous bearing. This should be taken into account when taking bearings over mountainous terrain.

COASTAL REFRACTION:

Radio waves may be refracted when passing from land to sea or when moving parallel to the coastline. This also should be taken into account.

SECTION 5
PERFORMANCE

There is no change to the airplane performance when this avionic equipment is installed. However, the installation of an externally mounted antenna or related external antennas, may result in a minor reduction in cruise performance.

Cessna
A Textron Company

Pilot's Operating Handbook and FAA Approved Airplane Flight Manual

CESSNA MODEL 172S

AIRPLANES 172S8001 AND ON

SUPPLEMENT 7

BENDIX/KING KAP 140 SINGLE AXIS AUTOPILOT

SERIAL NO._____

REGISTRATION NO._____

This supplement must be inserted into Section 9 of the Pilot's Operating Handbook and FAA Approved Airplane Flight Manual when the KAP 140 Single Axis Autopilot is installed.

FAA APPROVAL
FAA APPROVED UNDER FAR 21 SUBPART J
The Cessna Aircraft Co
Delegation Option Manufacturer CE-1
Executive Engineer
Date: 27 June 2000

COPYRIGHT © 1998
CESSNA AIRCRAFT COMPANY
WICHITA, KANSAS, USA

172SPHUS-S7-02

Member of GAMA

8 July 1998

Revision 2 - 31 October 2002

SUPPLEMENT 7

BENDIX/KING KAP 140
SINGLE AXIS AUTOPILOT

Use the Log of Effective Pages to determine the current status of this supplement. Pages affected by the current revision are indicated by an asterisk (*) preceeding the page number.

Supplement Status	Date
Original Issue	8 July 1998
Revision 1	30 May 2000
Revision 2	31 October 2002

LOG OF EFFECTIVE PAGES

Page	Page Status	Revision Number
* Title (S7-1)	Revised	2
* S7-1 thru S7-5	Revised	2
S7-6 thru S7-7	Revised	1
* S7-8 thru S7-19	Revised	2
* S7-20	Added	2

APPROVED BY

FAA APPROVED UNDER FAR 21 SUBPART J
The Cessna Aircraft Co.
Delegation Option Authorization DOA-100129-CE

Executive Engineer

DATE OF APPROVAL 10-31-02

SUPPLEMENT 7

BENDIX/KING KAP 140
SINGLE AXIS AUTOPILOT

SERVICE BULLETIN CONFIGURATION LIST

The following is a list of Service Bulletins that are applicable to the operation of the airplane, and have been incorporated into this supplement. This list contains only those Service Bulletins that are currently active.

Number	Title	Airplane Serial Effectivity	Revision Incorporation	Incorporated In Airplane
KC-140-M1 (Honeywell Service Bulletin)	KAP 140 AP		Revision 2	

SUPPLEMENT 7

BENDIX/KING KAP 140 SINGLE AXIS AUTOPILOT

SECTION 1

GENERAL

The Bendix/King KAP 140 is an all-electric, single-axis (aileron control) autopilot system that provides lateral and directional control. Components are a computer, a turn coordinator, an aileron actuator, a course deviation indicator, and a directional indicator or HSI (if installed).

Roll and yaw motions of the airplane are sensed by the turn coordinator gyro. The computer computes the necessary correction and signals the actuator to move the ailerons to maintain the airplane in the commanded lateral attitude.

The KAP 140 will provide wing leveler, heading hold, NAV track, and approach and backcourse lateral modes.

A lockout device prevents autopilot engagement until the system has been successfully preflight tested. Automatic preflight self-test begins with initial power application to the autopilot.

The following conditions will cause the autopilot to disengage:

A. Electric power failure.
B. Internal autopilot system failure.
C. Turn coordinator failure (flagged gyro).
D. Computer autopilot monitor that detects the R (ROLL) axis annunciator.

The AVIONICS MASTER switch supplies power to the avionics bus bar at the radio circuit breakers and the autopilot circuit breaker. The AVIONICS MASTER switch also services as an emergency autopilot (AP) shutoff.

The following circuit breakers are used to protect the listed elements of the KAP 140 single axis autopilot:

LABEL	FUNCTIONS
AUTO PILOT	Supplies power to the KC 140 Computer and the autopilot.
WARN	Supplies power to the autopilot disconnect tone.

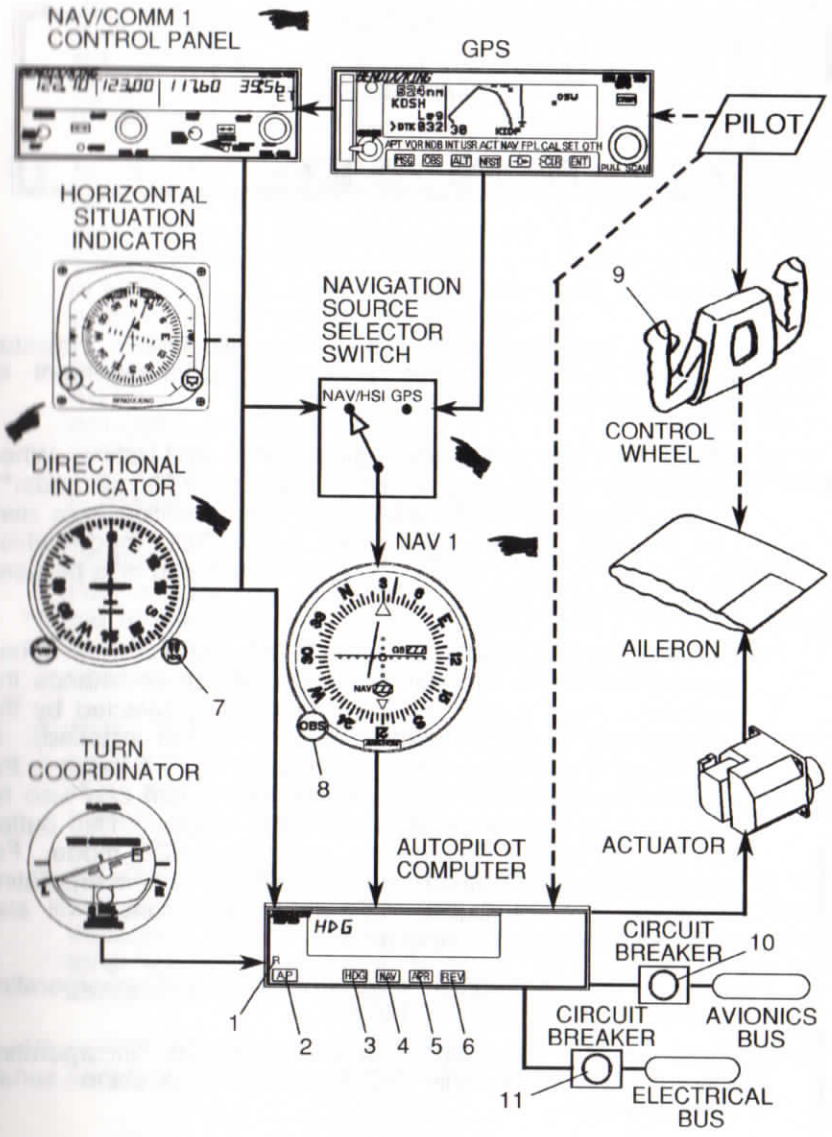

Figure 1. Bendix/King KAP 140 Autopilot, Operating Controls and Indicators (Sheet 1 of 3)

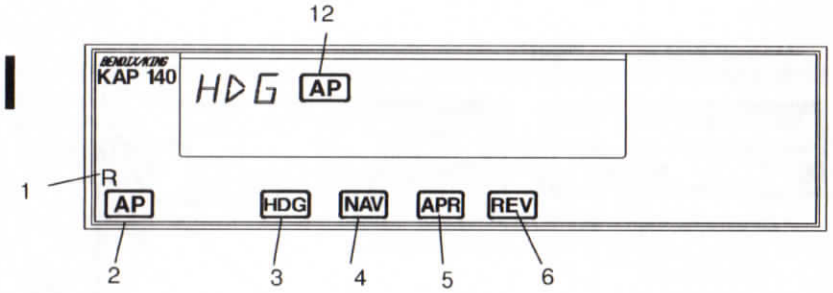

1. ROLL (R) AXIS ANNUNCIATOR -- When illuminated, indicates a failure in the roll axis and prevents engagement or disengages the autopilot.

2. AUTOPILOT ENGAGE/DISENGAGE (AP) BUTTON -- When pushed* or pressed and held (approx 0.25 seconds)**, engages autopilot if all preflight self test conditions are met. The autopilot will engage in the basic ROL mode which functions as a wings leveler. The AP button can also be used to disengage the autopilot.

3. HEADING (HDG) MODE SELECTOR BUTTON -- When pushed, will select the Heading mode, which commands the airplane to turn to and maintain the heading selected by the heading bug on the Directional Gyro or HSI (if installed). A new heading may be selected at any time and will result in the airplane turning to the new heading. The button can also be used to toggle between HDG and ROL modes. This button can also be used to engage the autopilot in HDG mode. For airplane serials 172S8001 thru 172S9128 not incorporating Honeywell Service Bulletin KC140-M1, this button will also engage the autopilot in HDG mode.

* Airplane serials 172S8001 thru 172S9128 not incorporating Honeywell Service Bulletin KC140-M1.

** Airplane serials 172S8001 thru 172S9128 incorporating Honeywell Service Bulletin KC140-M1, and airplane serials 172S9129 and on.

Figure 1. Bendix/King KAP 140 Autopilot, Operating Controls and Indicators (Sheet 2 of 3)

4. NAVIGATION (NAV) MODE SELECTOR BUTTON -- When pushed, will select the Navigation mode. This mode provides automatic beam capture and tracking of VOR, LOC, or GPS signals as selected for presentation on the NAV#1 CDI or HSI (if installed).

5. APPROACH (APR) MODE SELECTOR BUTTON -- When pushed, will select the Approach mode. This mode provides automatic beam capture and tracking of VOR, LOC, or GPS signals as selected for presentation on the NAV #1 CDI or HSI (if installed). The greater tracking sensitivity of the APR mode is recommended for instrument approaches.

6. BACK COURSE APPROACH (REV) MODE SELECTOR BUTTON -- This button is active only when the coupled navigation receiver is tuned to a LOC/ILS frequency. When pushed, it will select the Back Course (BC) approach mode. This mode functions indentically to the approach mode except that the autopilot response to LOC signals is reversed.

7. HEADING SELECT KNOB (HDG) -- Positions the heading pointer ("bug") on the compass card. Note that the position of the heading bug also provides course datum to the autopilot when tracking in NAV, APR, or REV (BC) modes. This is in addition to its more intuitive use in the HDG mode.

8. OMNI BEARING SELECT KNOB (OBS) -- Selects the desired course radial to be tracked by the autopilot. (Note that the HDG bug must also be positioned to the proper course to capture and track the selected radial).

9. AUTOPILOT DISCONNECT (A/P DISC) SWITCH -- When depressed will disengage the autopilot. The autopilot disconnect will be annunciated by a continuous two-second tone accompanied by a flashing "AP" displayed on the autopilot computer.

10. AUTOPILOT CIRCUIT BREAKER -- A 5-amp circuit breaker supplying 28 VDC to the KAP 140 system.

Figure 1. Bendix/King KAP 140 Autopilot, Operating Controls and Indicators (Sheet 3 of 3)

11. WARN C/B -- Power to the autopilot disconnect horn.

12. AUTOPILOT ENGAGE [AP] Annunciation** -- Illuminates whenever the autopilot is engaged. Flashes during pilot initiated or automatic disengagement.

* Airplane serials 172S8001 thru 172S9128 not incorporating Honeywell Service Bulletin KC140-M1.

** Airplane serials 172S8001 thru 172S9128 incorporating Honeywell Service Bulletin KC140-M1, and airplane serials 172S9129 and on.

SECTION 2
LIMITATIONS

The following autopilot limitations must be adhered to:

1. The autopilot must be OFF during takeoff and landing.
2. During autopilot operation, the pilot, with seat belt fastened, must be seated in the left front seat.
3. Continued autopilot system use is prohibited following abnormal or malfunctioning operation, and prior to corrective maintenance.
4. The entire PREFLIGHT procedure, outlined under Section 4, including steps 1 through 6, must be successfully completed prior to each flight. Use of the autopilot is prohibited prior to completion of these tests.
5. KMA 28 audio amplifier PUSH OFF/EMG operation is prohibited during normal operations.

NOTE

During emergency operation of the audio amplifier, the PUSH OFF/EMG state of the KMA 28 will prevent flight control system alerts from being heard.

SECTION 3
EMERGENCY PROCEDURES

The two step procedure listed under paragraph 1 should be among the basic airplane emergency procedures that are committed to memory. It is important that the pilot be proficient in accomplishing both steps without reference to this manual.

1. In case of Autopilot malfunction (accomplish Items a. and b. simultaneously):
   a. Airplane Control Wheel -- GRASP FIRMLY and regain aircraft control.
   b. A/P DISC Switch -- PRESS and HOLD throughout recovery.

NOTE

The AVIONICS MASTER switch may be used as an alternate means of removing power from the autopilot. In addition to the above, power may be removed with the Engage/Disengage button or the airplane MASTER switch. If necessary perform steps a. and b. above, then turn off the AVIONICS MASTER switch. Primary attitude, airspeed, directional and altitude control instruments will remain operational with either master switch OFF.

⚠ WARNING

- **DO NOT ATTEMPT TO RE-ENGAGE THE AUTOPILOT FOLLOWING AN AUTOPILOT MALFUNCTION.**
- **THE PILOT IN COMMAND MUST CONTINUOUSLY MONITOR THE AUTOPILOT WHEN IT IS ENGAGED, AND BE PREPARED TO DISCONNECT THE AUTOPILOT AND TAKE IMMEDIATE CORRECTIVE ACTION - INCLUDING MANUAL CONTROL OF THE AIRPLANE AND/OR PERFORMANCE OF EMERGENCY PROCEDURES - IF AUTOPILOT OPERATION IS NOT AS EXPECTED OR IF AIRPLANE CONTROL IS NOT MAINTAINED.**

AMPLIFIED EMERGENCY PROCEDURES

The following paragraphs are presented to supply additional information for the purpose of providing the pilot with a more complete understanding of the recommended course of action for an emergency situation.

⚠ WARNING

DO NOT ATTEMPT TO RE-ENGAGE THE AUTOPILOT FOLLOWING AN AUTOPILOT MALFUNCTION UNTIL CORRECTIVE SERVICE ACTION HAS BEEN PERFORMED ON THE SYSTEM.

An autopilot malfunction occurs when there is an uncommanded deviation in the airplane flight path or when there is abnormal control wheel movement. The main concern in reacting to an autopilot malfunction, or to an automatic disconnect of the autopilot, is in maintaining control of the airplane. Immediately grasp the control wheel and press and hold down the A/P DISC switch throughout the recovery. Manipulate the controls as required to safely maintain operation of the airplane within all of its operating limitations.The AVIONICS MASTER switch may be used as required to remove all power from the Autopilot. With the AVIONICS MASTER switch off, all flight instruments will remain operational; however, communications, navigation, and identification equipment will be inoperative.

Note that the emergency procedure for any malfunction is essentially the same: immediately grasp the control wheel and regain airplane control while pressing and the holding the A/P DISC switch down.

It is important that all portions of the autopilot system are preflight tested prior to each flight in accordance with the procedures published herein in order to assure their integrity and continued safe operation during flight.

A flashing mode annunciation on the face of the autopilot is normally an indication of mode loss.

NOTE

An exception to this is HDG annunciation which will flash for 5 seconds along with steady NAVARM, APRARM, or REVARM annunciation to remind the pilot to set the HDG bug for course datum use.

1. Flashing HDG -- Indicates a failed heading. PRESS HDG button to terminate flashing. ROL will be displayed.

2. Flashing NAV, APR or REV -- Indicates a flagged navigation source. If no NAV source is flagged, a failed heading mode can be the cause. PRESS NAV, APR or REV button to terminate flashing. ROL will be displayed.

NOTE

At the onset of mode annunciator flashing, the autopilot has already reverted to a default mode of operation, (i.e., ROL mode). An immediate attempt to reengage the lost mode may be made if the offending navigation flag has cleared.

Effects of instrument losses upon autopilot operation:

1. Loss of the artificial horizon -- no effect on the autopilot.
2. Loss of the turn coordinator -- autopilot inoperative.
3. Loss of the Directional Gyro (DG) -- The directional gyro does not provide any system valid flag. If the DG fails to function properly the autopilot heading and navigation mode will not function correctly. Under these conditions, the only useable lateral mode is ROL.
4. Loss of Horizontal Situation Indicator (HSI) (if installed) -- If the HSI fails to function properly the autopilot heading and navigation mode will not function correctly. Under these conditions, the only usable lateral mode is ROL.

SECTION 4
NORMAL PROCEDURES

PREFLIGHT (PERFORM PRIOR TO EACH FLIGHT):

1. GYROS -- Allow time for the turn coordinator to come up to speed, as evidenced by the turn coordinator flag being pulled from view.
2. AVIONICS MASTER -- ON.
3. POWER APPLICATION AND SELF TEST
   A self test is performed upon power application to the computer. This test is a sequence of internal checks that validate proper system operation prior to allowing normal system operation. The sequence is indicated by "PFT" (pre-flight test) with an increasing number for the sequence steps. Successful completion of self test is identified by all display segments being illuminated (Display Test) and the disconnect tone sounding.
4. AUTOPILOT -- ENGAGE by pressing AP button.
5. FLIGHT CONTROLS -- MOVE left and right to verify that the autopilot can be overpowered.

NOTE

Normal use will not require the autopilot to be overpowered.

6. A/P DISC Switch -- PRESS. Verify that the autopilot disconnects and tone sounds.

BEFORE TAKEOFF:

1. Autopilot -- OFF.

AUTOPILOT ENGAGEMENT:

1. AP Button -- PRESS. Note ROL annunciator on. If no other modes are selected the autopilot will operate in the ROL mode.

NOTE

Aircraft heading may change in ROL mode due to turbulence.

AUTOPILOT ENGAGEMENT:

1. AP Button -- PRESS. Note ROL annunciator on. If no other modes are selected the autopilot will operate in the ROL mode.

NOTE

Aircraft heading may change in ROL mode due to turbulence.

HEADING HOLD

1. Heading Selector Knob -- SET bug to desired heading.
2. HDG Mode Selector Button -- PRESS. Note HDG mode annunciator ON. Autopilot will automatically turn the aircraft to the selected heading.

COMMAND TURNS (HEADING HOLD MODE ENGAGED)

1. Heading Selector Knob -- MOVE bug to the desired heading. Autopilot will automatically turn the aircraft to the new selected heading.

NAV COUPLING

1. When equipped with DG:
   a. **NAV#1 OBS** Knob -- **SELECT** desired course.
   b. **NAV** Mode Selector Button -- **PRESS**. Note **NAVARM** annunciated.
   c. Heading Selector Knob -- **ROTATE BUG** to agree with **OBS** course.

NOTE

When NAV is selected, the autopilot will flash HDG for 5 seconds to remind the pilot to reset the HDG bug to the OBS course. If HDG mode was in use at the time of NAV button selection, a 45° intercept angle will then be automatically established based on the position of the bug.

NOTE

All angle intercepts compatible with radar vectors may be accomplished by selecting ROL mode PRIOR to pressing the NAV button. The HDG bug must still be positioned to agree with the OBS course to provide course datum to the autopilot when using a DG (Directional Gyro).

1) If the CDI needle is greater than 2 to 3 dots from center, the autopilot will annunciate **NAV_{ARM}**. When the computed capture point is reached, the **ARM** annunciator will go out and the selected course will be automatically captured and tracked.

2) If the CDI needle is less than 2 to 3 dots from center, the HDG mode will disengage upon selecting NAV mode. The **NAV** annunciator will then illuminate and the capture/track sequence will automatically begin.

2. When equipped with HSI:

   a. Course Bearing Pointer - **SET** to desired course.

   b. Heading Selector Knob -- **SET BUG** to provide desired intercept angle and engage HDG mode.

   c. **NAV** Mode Selector Button -- **PRESS**.

      1) If the Course Deviation Bar (D-Bar) is greater than 2 to 3 dots from center, the autopilot will annunciate **NAV_{ARM}**. When the computed capture point is reached the **ARM** annunciator will go out and the selected course will be automatically captured and tracked.

      2) If the D-Bar is less than 2 to 3 dots from center, the HDG mode will disengage upon selecting NAV mode; the **NAV** annunciator will illuminate and the capture/track sequence will automatically begin.

APPROACH (APR) COUPLING: (To enable glideslope coupling on an ILS and more precise tracking on instrument approaches).

1. When equipped with DG:

   a. **NAV #1 OBS** Knob -- **SELECT** desired approach course. (For a localizer, set it to serve as a memory aid.)

   b. **APR** Mode Selector Button -- **PRESS**. Note **APR_{ARM}** annunciated.

   c. Heading Selector Knob -- **ROTATE BUG** to agree with desired approach.

NOTE

When APR is selected, the autopilot will flash HDG for 5 seconds to remind the pilot to reset the HDG bug to the approach course. If HDG mode was in use at the time of APR button selection a 45° intercept angle will then be automatically established based on the positon of the bug.

NOTE

All angle intercepts compatible with radar vectors may be accomplished by selecting ROL mode PRIOR to pressing the APR button. The HDG bug must still be positioned to agree with the desired approach course to provide course datum to the autopilot when using a DG.

1) If the CDI needle is greater than 2 to 3 dots from center, the autopilot will annunciate **APR_{ARM}**; when the computed capture point is reached the **ARM** annunciator will go out and the selected course will be automatically captured and tracked.

2) If the CDI needle is less than 2 to 3 dots from center, the HDG mode will disengage upon selecting APR mode; the **APR** annunciator will illuminate and the capture/track sequence will automatically begin.

2. When equipped with HSI:

a. Course Bearing Pointer -- **SET** to desired course.

b. Heading Selector Knob -- **SET BUG** to provide desired intercept angle.

c. **APR** Mode Selector Button -- **PRESS**.

1) If the D-Bar is greater than 2 to 3 dots from center, the autopilot will annunciate **APR$_{ARM}$**; when the computed capture point is reached the **ARM** annunciator will go out and the selected course will be automatically captured and tracked.

2) If the D-Bar is less than 2 to 3 dots from center, the HDG mode will disengage upon selecting APR mode; the **APR** annunciator will illuminate and the capture/track sequence will automatically begin.

d. Airspeed -- **MAINTAIN** 90 KIAS during autopilot approaches (recommended).

BACK COURSE (REV) APPROACH COUPLING (i.e., reverse localizer):

1. When equipped with DG:

a. **NAV #1 OBS** Knob -- **SELECT** the localizer course to the front course inbound (as a memory aid).

b. **REV** Mode Selector Button -- **PRESS**.

c. Heading Selector Knob -- **ROTATE BUG** to the heading corresponding to the localizer front course bound.

NOTE

- When REV is selected, the autopilot will flash HDG for 5 seconds to remind the pilot to reset the HDG bug to the localizer FRONT COURSE INBOUND heading. If heading mode was in use at the time of REV button selection, a 45° intercept angle will then be automatically established based on the position of the bug.

- All angle intercepts compatible with radar vectors may be accomplished by selecting ROL mode PRIOR to pressing the REV button. The HDG bug must still be positioned to the localizer FRONT COURSE INBOUND heading to provide course datum to the autopilot when using a DG.

1) If the CDI needle is greater than 2 to 3 dots from center, the autopilot will annunciate **REV$_{ARM}$**; when the computed capture point is reached the ARM annunciator will go out and the selected back course will be automatically captured and tracked.

2) If the CDI needle is less than 2 to 3 dots from center, the HDG mode will disengage upon selecting REV mode; the REV annunciator will illuminiate and the capture/track sequence will automatically begin.

2. When equipped with HSI:

a. Course Bearing Pointer -- **SET** to the ILS front course inbound heading.

b. Heading Selector Knob -- **SET BUG** to provide desired intercept angle and engage HDG mode.

c. **REV** Mode Selector Button -- **PRESS**.

1) If the D-Bar is greater than 2 to 3 dots from center, the autopilot will annunciate **REV$_{ARM}$**; when the computed capture point is reached the **ARM** annunciator will go out and the selected back course will be automatically captured and tracked.

2) If the D-Bar is less than 2 to 3 dots from center, the HDG mode will disengage upon selecting **REV** mode; the **REV** annunciator will illuminate and the capture/track sequence will automatically begin.

d. Airspeed -- **MAINTAIN** 90 KIAS during autopilot approaches (recommended).

MISSED APPROACH

1. A/P DISC -- PRESS to disengage AP.
2. MISSED APPROACH -- EXECUTE.
3. AP Button -- PRESS (if AP operation is desired). Note ROL annunciator ON. Select optional lateral modes as desired.

BEFORE LANDING

1. A/P DISC Switch -- PRESS to disengage AP.

SECTION 5
PERFORMANCE

There is no change to the airplane performance when the KAP140 Autopilot is installed.

Cessna
A Textron Company

Pilot's Operating Handbook and FAA Approved Airplane Flight Manual

CESSNA MODEL 172S

AIRPLANES 172S8001 AND ON

SUPPLEMENT 8

WINTERIZATION KIT

SERIAL NO._____

REGISTRATION NO._____

This supplement must be inserted into Section 9 of the Pilot's Operating Handbook and FAA Approved Airplane Flight Manual when the Winterization Kit is installed.

FAA APPROVAL
FAA APPROVED UNDER FAR 21 SUBPART J
The Cessna Aircraft Co
Delegation Option Manufacturer CE-1
Executive Engineer
Date: July 10, 1998

COPYRIGHT © 1998
CESSNA AIRCRAFT COMPANY
WICHITA, KANSAS, USA

172SPHUS-S8-00

Member of GAMA

8 July 1998

SUPPLEMENT 8

WINTERIZATION KIT

The following Log of Effective Pages provides the date of issue for original and revised pages, as well as a listing of all pages in the Supplement. Pages which are affected by the current revision will carry the date of that revision

Revision Level	Date of Issue
0 (Original)	July 8, 1998

LOG OF EFFECTIVITY PAGES

PAGE	DATE	PAGE	DATE
Title (S8-1)	July 8/98		
S8-2	July 8/98		
S8-3	July 8/98		
S8-4	July 8/98		

SERVICE BULLETIN CONFIGURATION LIST

The following is a list of Service Bulletins that are applicable to the operation of the airplane, and have been incorporated into this supplement. This list contains only those Service Bulletins that are currently active.

Number	Title	Airplane Unit Effectivity	Revision Incorporation	Incorporated In Airplane

SUPPLEMENT

WINTERIZATION KIT

SECTION 1
GENERAL

The winterization kit consists of two cover plates (with placards) which attach to the air intakes in the cowling nose cap, a placard silk screened on the instrument panel, and insulation for the crankcase breather line. This equipment should be installed for operations in temperatures consistently below 20°F (-7°C). Once installed, the crankcase breather insulation is approved for permanent use, regardless of temperature.

SECTION 2
LIMITATIONS

The following information must be presented in the form of placards when the airplane is equipped with a winterization kit.

1. On each nose cap cover plate:

REMOVE WHEN O.A.T. EXCEEDS +20°F.

2. On the instrument panel near the EGT gauge:

WINTERIZATION KIT MUST BE REMOVED WHEN OUTSIDE AIR TEMPERATURE IS ABOVE 20°F.

SECTION 3
EMERGENCY PROCEDURES

There is no change to the airplane emergency procedures when the winterization kit is installed.

SECTION 4
NORMAL PROCEDURES

There is no change to the airplane normal procedures when the winterization kit is installed.

SECTION 5
PERFORMANCE

There is no change to the airplane performance when the winterization kit is installed.

Cessna
A Textron Company

Pilot's Operating Handbook and FAA Approved Airplane Flight Manual

CESSNA MODEL 172S

AIRPLANES 172S8001 AND ON

SUPPLEMENT 9

DAVTRON MODEL 803
CLOCK/O.A.T.

SERIAL NO._____

REGISTRATION NO._____

This supplement must be inserted into Section 9 of the Pilot's Operating Handbook and FAA Approved Airplane Flight Manual when the Davtron Clock/O.A.T. is installed.

FAA APPROVAL
FAA APPROVED UNDER FAR 21 SUBPART J
The Cessna Aircraft Co
Delegation Option Manufacturer CE-1
Executive Engineer
Date: July 10, 1998

Member of GAMA

8 July 1998

COPYRIGHT © 1998
CESSNA AIRCRAFT COMPANY
WICHITA, KANSAS, USA

172SPHUS-S9-00

SUPPLEMENT 9

DAVTRON MODEL 803 CLOCK/O.A.T.

The following Log of Effective Pages provides the date of issue for original and revised pages, as well as a listing of all pages in the Supplement. Pages which are affected by the current revision will carry the date of that revision

Revision Level	Date of Issue
0 (Original)	July 8, 1998

LOG OF EFFECTIVITY PAGES

PAGE	DATE	PAGE	DATE
Title (S9-1)	July 8/98	S9-5	July 8/98
S9-2	July 8/98	S9-6	July 8/98
S9-3	July 8/98		
S9-4	July 8/98		

SERVICE BULLETIN CONFIGURATION LIST

The following is a list of Service Bulletins that are applicable to the operation of the airplane, and have been incorporated into this supplement. This list contains only those Service Bulletins that are currently active.

Number	Title	Airplane Unit Effectivity	Revision Incorporation	Incorporated In Airplane

SUPPLEMENT

DIGITAL CLOCK/O.A.T.

SECTION 1
GENERAL

The Davtron Model 803 digital clock combines the features of a clock, outside air temperature gauge (O.A.T.) and voltmeter in a single unit. The unit is designed for ease of operation with the use of three buttons. The upper button is used to control sequencing between temperature and voltage. The lower two buttons control reading and timing functions related to the digital clock. Temperature and voltage functions are displayed in the upper portion of the unit's LCD window, and clock/timing functions are displayed in the lower portion of the unit's LCD window.

The digital display features an internal light (back light) to ensure good visibility under low cabin lighting conditions and at night. The intensity of the back light is controlled by the PANEL LT rheostat. In addition, the display incorporates a test function which allows checking that all elements of the display are operating.

SECTION 2
LIMITATIONS

There is no change to the airplane limitations when the digital clock/O.A.T. is installed.

SECTION 3
EMERGENCY PROCEDURES

There is no change to the airplane emergency procedures when the digital clock/O.A.T. is installed.

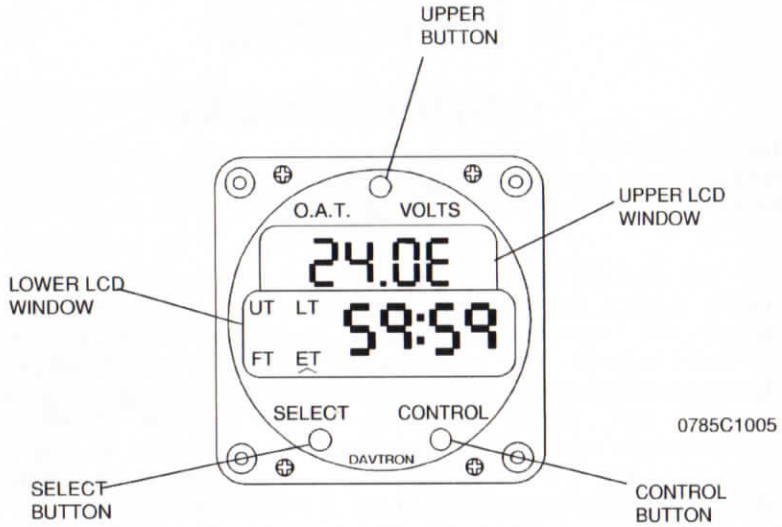

Figure 1. Clock/OAT Gauge

SECTION 4
NORMAL PROCEDURES

TEST MODE

The unit may be tested by holding the SELECT button down for three seconds. Proper operation is indicated by the display 88:88 and activation of all four annunciators.

O.A.T. / VOLTMETER OPERATION

The upper portion of the LCD window is dedicated to O.A.T. and voltmeter operations. The voltmeter reading is preselected upon startup and is indicated by an "E" following the display reading. Pushing the upper control button will sequence the window from voltage to fahrenheit ("F") to centigrade ("C"), and back again to voltage.

CLOCK OPERATIONS

The lower portion of the LCD window is dedicated to clock and timing operations. Pushing the SELECT button will sequence the window from universal time (UT) to local time (LT) to flight time (FT) to elapsed time (ET), and back again to universal time. Pushing the CONTROL button allows for timing functions within the four SELECT menus. Setting procedures are as follows:

SETTING UNIVERSAL TIME

Use the SELECT button to select universal time (UT). Simultaneously press both the SELECT and the CONTROL buttons to enter the set mode. The tens of hours digit will start flashing. The CONTROL button has full control of the flashing digit, and each button push increments the digit. Once the tens of hours is set the SELECT button selects the next digit to be set. After the last digit has been selected and set with the CONTROL button, a final push of the SELECT button exits the set mode. The lighted annunciator will resume its normal flashing, indicating the clock is running in universal time mode.

SETTING LOCAL TIME

Use the SELECT button to select local time (LT). Simultaneously press both the SELECT and the CONTROL buttons to enter the set mode. The tens of hours digit will start flashing. The set operation is the same as for UT, except that minutes are already synchronized with the UT clock and cannot be set in local time.

FLIGHT TIME RESET

Use the SELECT button to select flight time (FT). Hold the CONTROL button down for 3 seconds, or until 99:59 appears on the display. Flight time will be zeroed upon release of the CONTROL button.

SETTING FLIGHT TIME FLASHING ALARM

Use the SELECT button to select flight time (FT). Simultaneously press both the SELECT and the CONTROL buttons to enter the set mode. The tens of hours digit will start flashing. The set operation is the same as for UT. When actual flight time equals the alarm time, the display will flash. Pressing either the SELECT or CONTROL button will turn the flashing off and zero the alarm time. Flight time is unchanged and continues counting.

SETTING ELAPSED TIME COUNT UP

Use the SELECT button to select elapsed time (ET). Press the CONTROL button and elapsed time will start counting. Elapsed time counts up to 59 minutes, 59 seconds, and then switches to hours and minutes. It continues counting up to 99 hours and 59 minutes. Pressing the CONTROL button again resets elapsed time to zero.

SETTING ELAPSED TIME COUNT DOWN

Use the SELECT button to select Elapsed Time (ET). Simultaneously press both the SELECT and the CONTROL buttons to enter the set mode. The tens of hours digit will start flashing. The set operation is the same as for UT, and a count down time can be set from a maximum of 59 minutes and 59 seconds. Once the last digit is set, pressing the SELECT button exits the set mode and the clock is ready to start the countdown. Pressing the CONTROL button now will start the countdown. When countdown reaches zero, the display will flash. Pressing either the SELECT or CONTROL button will reset the alarm. After reaching zero, the elapsed time counter will count up.

Button Select Disable

When there is no airplane power applied to the unit, the CONTROL and SELECT buttons are disabled.

SECTION 5
PERFORMANCE

There is no change to the airplane performance when this equipment is installed. However, installation of this O.A.T. probe may result in a minor reduction in cruise performance.

Cessna
A Textron Company

Pilot's Operating Handbook and FAA Approved Airplane Flight Manual

CESSNA MODEL 172S

AIRPLANES 172S8001 AND ON

SUPPLEMENT 10

BENDIX/KING KLN 89

VFR GLOBAL POSITIONING SYSTEM (GPS)

SERIAL NO._____

REGISTRATION NO._____

This supplement must be inserted into Section 9 of the Pilot's Operating Handbook and FAA Approved Airplane Flight Manual when the Global Positioning System is installed.

FAA APPROVAL
FAA APPROVED UNDER FAR 21 SUBPART J
The Cessna Aircraft Co
Delegation Option Manufacturer CE-1
Executive Engineer
Date: 27 June 2000

COPYRIGHT © 1998
CESSNA AIRCRAFT COMPANY
WICHITA, KANSAS, USA

172SPHUS-S10-01

Member of GAMA

8 July 1998

Revision 1 - 30 May 2000

SUPPLEMENT 10

BENDIX/KING KLN 89
VFR GLOBAL POSITIONING SYSTEM (GPS)

The following Log of Effective Pages provides the date of issue for original and revised pages, as well as a listing of all pages in the Supplement. Pages which are affected by the current revision will carry the date of that revision

Revision Level	Date of Issue
0 (Original)	July 8, 1998
1	May 30/00

LOG OF EFFECTIVITY PAGES

PAGE	DATE	PAGE	DATE
Title (S10-1)	May 30/00		
S10-2	May 30/00		
S10-3	May 30/00		
S10-4	July 8/98		

SERVICE BULLETIN CONFIGURATION LIST

The following is a list of Service Bulletins that are applicable to the operation of the airplane, and have been incorporated into this supplement. This list contains only those Service Bulletins that are currently active.

Number	Title	Airplane Unit Effectivity	Revision Incorporation	Incorporated In Airplane

SUPPLEMENT

BENDIX/KING KLN 89
VFR GLOBAL POSITIONING SYSTEM (GPS)

SECTION 1
GENERAL

The Bendix/King KLN 89 is a navigation system based on the Global Positioning Satellite network. It contains a database cartridge which may be updated by subscription. Complete descriptive material on the KLN 89 may be found in the Bendix/King KLN 89 Pilot's Guide supplied with the unit. This pilot guide must be available during operation of the KLN 89 unit.

SECTION 2
LIMITATIONS

Use of the KLN 89 is limited to VFR operations only. The following information must be presented in the form of placards when the airplane is equipped with a KLN 89 unit:

1. On the instrument panel near the KLN 89 unit:

GPS NOT APPROVED FOR IFR NAVIGATION

SECTION 3
EMERGENCY PROCEDURES

There is no change to the airplane emergency procedures when the KLN 89 GPS is installed.

SECTION 4
NORMAL PROCEDURES

There is no change to basic airplane normal operating procedures with the KLN 89 GPS installed.

SECTION 5
PERFORMANCE

There is no change to the airplane performance when the KLN 89 GPS is installed. However, installation of an externally-mounted antenna or related external antennas may result in a minor reduction in cruise performance.

Cessna
A Textron Company

Pilot's Operating Handbook and FAA Approved Airplane Flight Manual

CESSNA MODEL 172S

AIRPLANES 172S8001 AND ON

SUPPLEMENT 12

CANADIAN SUPPLEMENT

SERIAL NO._____

REGISTRATION NO._____

This supplement must be inserted into Section 9 of the Pilot's Operating Handbook and FAA Approved Airplane Flight Manual when used for Canadian Operation.

FAA APPROVAL
FAA APPROVED UNDER FAR 21 SUBPART J
The Cessna Aircraft Co
Delegation Option Manufacturer CE-1
Executive Engineer
Date: July 10, 1998

Member of GAMA

8 July 1998

COPYRIGHT © 1998
CESSNA AIRCRAFT COMPANY
WICHITA, KANSAS, USA

172SPHUS-S12-00

SUPPLEMENT 12

CANADIAN SUPPLEMENT

The following Log of Effective Pages provides the date of issue for original and revised pages, as well as a listing of all pages in the Supplement. Pages which are affected by the current revision will carry the date of that revision

Revision Level	Date of Issue
0 (Original)	July 8, 1998

LOG OF EFFECTIVITY PAGES

PAGE	DATE	PAGE	DATE
Title (S12-1)	July 8/98	S12-3	July 8/98
S12-2	July 8/98	S12-4	July 8/98

SERVICE BULLETIN CONFIGURATION LIST

The following is a list of Service Bulletins that are applicable to the operation of the airplane, and have been incorporated into this supplement. This list contains only those Service Bulletins that are currently active.

Number	Title	Airplane Unit Effectivity	Revision Incorporation	Incorporated In Airplane

SUPPLEMENT

CANADIAN SUPPLEMENT

SECTION 1
GENERAL

This supplement is required for Canadian operation of Cessna Model 172S.

SECTION 2
LIMITATIONS

The following placard must be installed.

1. Near the fuel tank filler cap:

FUEL
100LL/ 100 MIN. GRADE AVIATION GASOLINE
CAP. 26.5 U.S. GAL. (100 LITRES) USABLE
CAP 17.5 U.S. GAL. (66 LITRES) USABLE
TO BOTTOM OF FILLER INDICATOR TAB

SECTION 3
EMERGENCY PROCEDURES

There is no change to the airplane emergency procedures when used for Canadian operation.

SECTION 4
NORMAL PROCEDURES

There is no change to basic airplane normal operating procedures when used for Canadian operation.

SECTION 5
PERFORMANCE

There is no change to the airplane performance when used for Canadian operation.

Cessna
A Textron Company

Pilot's Operating Handbook and FAA Approved Airplane Flight Manual

CESSNA MODEL 172S

AIRPLANES 17208113 AND ON

SUPPLEMENT 13

BENDIX/KING KCS-55A SLAVED COMPASS SYSTEM WITH KI-525A HORIZONTAL SITUATION INDICATOR (HSI)

SERIAL NO._____

REGISTRATION NO._____

This supplement must be inserted into Section 9 of the Pilot's Operating Handbook and FAA Approved Airplane Flight Manual when Horizontal Situation Indicator is installed.

FAA APPROVAL
FAA APPROVED UNDER FAR 21 SUBPART J
The Cessna Aircraft Co
Delegation Option Manufacturer CE-1
Executive Engineer
Date: 27 June 2000

COPYRIGHT © 1999
CESSNA AIRCRAFT COMPANY
WICHITA, KANSAS, USA

172SPHUS-S13-01

Member of GAMA

15 January 1999

Revision 1 - 30 May 2000

SUPPLEMENT 13

BENDIX/KING KCS-55A SLAVED COMPASS SYSTEM WITH KI-525A HORIZONTAL SITUATION INDICATOR (HSI)

The following Log of Effective Pages provides the date of issue for original and revised pages, as well as a listing of all pages in the Supplement. Pages which are affected by the current revision will carry the date of that revision

Revision Level	Date of Issue
0 (Original)	Jan. 15, 1999
1	May 30, 2000

LOG OF EFFECTIVITY PAGES

PAGE	DATE	PAGE	DATE
Title (S13-1)	May 30/00	S13-5	Jan. 15/99
S13-2	May 30/00	S13-6	Jan. 15/99
S13-3	May 30/00	S13-7	Jan. 15/99
S13-4	Jan. 15/99	S13-8	Jan. 15/99

SERVICE BULLETIN CONFIGURATION LIST

The following is a list of Service Bulletins that are applicable to the operation of the airplane, and have been incorporated into this supplement. This list contains only those Service Bulletins that are currently active.

Number	Title	Airplane Unit Effectivity	Revision Incorporation	Incorporated In Airplane

SUPPLEMENT 13

BENDIX/KING KCS-55A SLAVED COMPASS SYSTEM WITH KI-525A HORIZONTAL SITUATION INDICATOR (HSI)

SECTION 1
GENERAL

The Bendix/King KCS-55A Slaved Compass System with KI-525A HSI Indicator is an additional navigation indicator option. The KCS-55A compass system includes a slaving control and compensator unit, magnetic slaving transmitter and a remote directional gyro. The information obtained from the KCS-55A compass system is displayed on the KI-525A Indicator.

The panel-mounted KI-525A indicator combines the display functions of both the standard Directional Gyro (Heading Indicator) and the Course Deviation Indicator's VOR/LOC/Glideslope information to provide the pilot with a single visual presentation of the complete horizontal navigation situation.

This system also incorporates a slaving accessory and compensator unit. This unit indicates any difference between the displayed heading and the magnetic heading. Up deflection indicates a clockwise error of the compass card. Down deflection indicates a counterclockwise error of the compass card. Whenever the aircraft is in a turn and the compass card rotates, it is normal for this meter to show a full deflection to one side or the other.

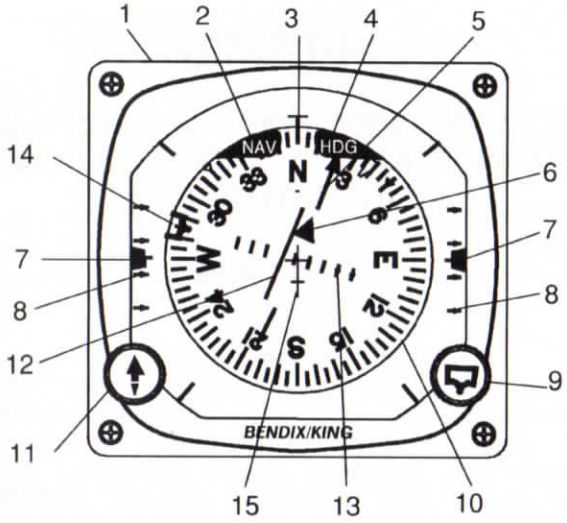

Figure 1. Horizontal Situation Indicator System (Sheet 1 of 2)

1. HORIZONTAL SITUATION INDICATOR (HSI) -- Provides a pictorial presentation of aircraft deviation relative to VOR/GPS radials and localizer beams. It also displays glide slope deviations and gives heading reference with respect to magnetic north. The gyro is remote-mounted and electric-driven

2. NAV FLAG -- Flag is in view when the NAV receiver signal is inadequate.

3. HEADING REFERENCE (LUBBER LINE) -- Magnetic heading appears under this line when the compass card is slaved or slewed to the aircraft's magnetic heading.

4. HEADING WARNING FLAG (HDG) -- When flag is in view, the heading display is invalid.

5. COURSE SELECT POINTER -- Indicates VOR/Localizer or GPS course on the compass card. The selected VOR radial or localizer heading remains set on the compass card when the compass card rotates.

6. TO/FROM INDICATOR -- Indicates direction of VOR station relative to the selected course. Displays TO when a LOC frequency is selected.

7. DUAL GLIDE SLOPE POINTERS -- Displays deviation of airplane from an ILS glideslope. Full scale deflection of the glideslope pointers represents ±0.7 degrees. Pointers will be out of view if an invalid glideslope signal is received.

8. GLIDE SLOPE SCALES -- Indicates displacement from glide slope beam center. A glide slope deviation bar displacement of 2 dots represents full-scale (0.7°) deviation above or below glide slope beam centerline.

9. HEADING SELECTOR KNOB ( )-- Positions the heading bug on compass card by rotating the heading selector knob. The bug rotates with the compass card.

10. COMPASS CARD -- Rotates to display heading of airplane with reference to lubber line on HSI.

11. COURSE SELECTOR KNOB ( )-- Positions the course bearing pointer on the compass card by rotating the course selector knob.

12. COURSE DEVIATION BAR (D-BAR) - The center portion of the omni bearing pointer moves laterally to pictorially indicate the relationship of airplane to the selected course. It indicates degrees of angular displacement from VOR radials and localizer beams, or displacement in nautical miles from GPS desired course.

13. COURSE DEVIATION SCALE -- A course deviation bar displacement of 5 dots represents full scale (VOR = ±10°, LOC = ±2-1/2°, GPS = 5nm enroute, GPS APR = .3nm) deviation from beam centerline.

14. HEADING BUG -- Moved by ( ) knob to select desired heading.

15. SYMBOLIC AIRCRAFT -- Provides pictorial presentation of the airplane position and intercept angle relative to selected VOR Radial or localizer course.

Figure 1. Horizontal Situation Indicator System (Sheet 2 of 2)

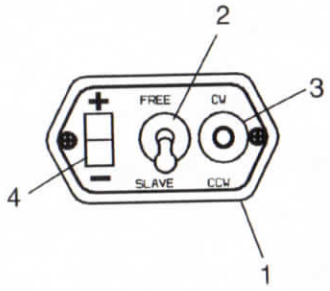

Figure 2. KA-51B Slaving Accessory and Compensator Unit

1. KA-51B SLAVING ACCESSORY AND COMPENSATOR UNIT -- Controls the KCS-55A Compass System.

2. MANUAL/AUTOMATIC (FREE/SLAVE) COMPASS SLAVE SWITCH -- Selects either the manual or automatic slaving mode for the Compass System.

3. CW/CCW COMPASS MANUAL SLAVE SWITCH -- With the manual/automatic compass slave switch in the FREE position, allows manual compass card slaving in either the clockwise or counterclockwise direction. The switch is spring loaded to the center position.

4. SLAVING METER -- Indicates the difference between the displayed heading and the magnetic heading. Up deflection indicates a clockwise error of the compass card. Down deflection indicates a counterclockwise error of the compass card.

SECTION 2
LIMITATIONS

There is no change to the airplane limitations when this instrument is installed.

SECTION 3
EMERGENCY PROCEDURES

There is no change to the airplane emergency procedures when this instrument is installed.

SECTION 4
NORMAL PROCEDURES

⚠ CAUTION

ELECTRICAL POWER MUST BE SUPPLIED TO THIS INSTRUMENT FOR PROPER FUNCTIONING. ABSENCE OF WHICH WILL RESULT IN UNRELIABLE HEADING INFORMATION.

Normal procedures for operation of this system differ little from those required for the more conventional Course Deviation Indicators. However, several small differences are worth noting.

The rectilinear movement of the course deviation bar in combination with the rotation of the compass card in response to heading changes, provides an intuitive picture of the navigation situation at a glance when tuned to an omni station. When tuned to a localizer frequency, the course select pointer must be set to the inbound front course for both front and back-course approaches to retain this pictorial presentation.

For normal procedures with autopilots, refer to the Autopilot Supplements in the Supplement section of this handbook. A description of course datum and autopilot procedures for course datum are incorporated in the appropriate autopilot supplements.

SECTION 5
PERFORMANCE

There is no change to the airplane performance when this instrument is installed.

Cessna
A Textron Company

Pilot's Operating Handbook and FAA Approved Airplane Flight Manual

CESSNA MODEL 172S

AIRPLANES 172S8348 AND ON

SUPPLEMENT 15

BENDIX/KING KAP 140 2 AXIS AUTOPILOT

SERIAL NO._____

REGISTRATION NO._____

This supplement must be inserted into Section 9 of the Pilot's Operating Handbook and FAA Approved Airplane Flight Manual when the KAP 140 2 Axis Autopilot System is installed.

FAA APPROVAL
FAA APPROVED UNDER FAR 21 SUBPART J
The Cessna Aircraft Co
Delegation Option Manufacturer CE-1
Executive Engineer
Date: 28 December 1999

COPYRIGHT © 1999
CESSNA AIRCRAFT COMPANY
WICHITA, KANSAS, USA

172SPHUS-S15-05

Member of GAMA

28 December 1999

Revision 5 - 4 June 2003

SUPPLEMENT 15

BENDIX/KING KAP 140
2 AXIS AUTOPILOT

Use the Log of Effective Pages to determine the current status of this supplement. Pages affected by the current revision are indicated by an asterisk (*) preceeding the page number.

Supplement Status	Date
Original Issue	28 December 1999
Revision 1	30 May 2000
Revision 2	30 December 2000
Revision 3	28 June 2002
Revision 4	31 October 2002
Revision 5	4 June 2003

LOG OF EFFECTIVE PAGES

Page	Page Status	Revision Number
* S15-1 thru S15-20	Revised	5
* S15-20A thru S15-20B	Deleted	5
* S15-21 thru S15-32	Revised	5
* S15-33 thru S15-36	Added	5

APPROVED BY

FAA APPROVED UNDER FAR 21 SUBPART J
The Cessna Aircraft Co.
Delegation Option Authorization DOA-100129-CE

Executive Engineer

DATE OF APPROVAL 06-04-03

SUPPLEMENT 15

BENDIX/KING KAP 140
2 AXIS AUTOPILOT

SERVICE BULLETIN CONFIGURATION LIST

The following is a list of Service Bulletins that are applicable to the operation of the airplane, and have been incorporated into this supplement. This list contains only those Service Bulletins that are currently active.

Number	Title	Airplane Serial Effectivity	Revision Incorporation	Incorporated In Airplane
KC-140-M1 (Honeywell Service Bulletin)	KAP 140 AP		Revision 3	

SUPPLEMENT 15

BENDIX/KING KAP 140 2 AXIS AUTOPILOT

SECTION 1 GENERAL

The KAP 140 2 Axis Autopilot provides the pilot with the following features: Vertical Speed mode (VS); Altitude hold (ALT); Wing Level (ROL); Heading select (HDG); Approach (APR); ILS coupling to Localizer (LOC) and Glideslope (GS); and backcourse (REV) modes of operation. The optional KAP 140, 2 Axis Autopilot with Altitude Preselect (if installed) adds Altitude Alerter and Altitude Preselect capabilities.

The KAP 140 2 Axis Autopilot has an electric trim system which provides autotrim during autopilot operation and manual electric trim (MET) for the pilot when the autopilot is not engaged. The electric trim system is designed to be fail safe for any single inflight trim malfunction. Trim faults are visually and aurally annunciated.

A lockout device prevents autopilot or MET engagement until the system has successfully passed preflight self-test. Automatic preflight self-test begins with initial power application to the autopilot.

The following conditions will cause the autopilot to disengage:

A. Electric Power failure.

B. Internal Autopilot System failure.

C. Pitch accelerations in excess of +1.4g or less than +0.6g only when produced by a failure causing servo runaway. The pilot cannot maneuver the airplane and trip the monitor.

D. Turn coordinator failure (small square red flag visible on instrument).

E. Computer autopilot monitor that detects either the R (ROLL) or P (PITCH) axis annunciator.

Activation of A/P DISC/TRIM INT control wheel switch will also disconnect the autopilot.

The AVIONICS MASTER switch supplies power to the avionics bus bar of the radio circuit breakers and the autopilot circuit breaker. The AVIONICS MASTER switch also serves as an emergency AP/MET shutoff.

The following circuit breakers are used to protect the KAP 140 2 Axis Autopilot:

LABEL	FUNCTIONS
AUTO PILOT	Pull-off circuit breaker supplies power to the KC 140 Computer and the autopilot pitch, roll and pitch trim servos.
WARN	Supplies separate power for autopilot alerting (PITCH TRIM) on the airplane's annunciator panel.

At 172S serial number 172S9423 and On, automated Roll Steering functionality has been added to the Bendix/King KLN 94 GPS Navigation System and the KAP 140 2 Axis Autopilot System. Roll Steering coupling between the GPS and the Autopilot provides area navigation with automatic course changes at flight plan waypoints similar to Flight Management System (FMS) operations, but without vertical navigation capability. The Roll Steering function is similar to "turn anticipation" for the autopilot.

At the noted serial effectivity, the KLN 94 GPS (ORS 03 or later) has an added Roll Steering signal output. In order for the GPS Roll Steering output to be utilized, the KAP 140 Autopilot (-7904 or later) has an added input for the Roll Steering signal and additional system wiring has been added to the airplane to connect the Roll Steering signal output from the KLN 94 GPS to the Roll Steering input of the KAP 140 Autopilot.

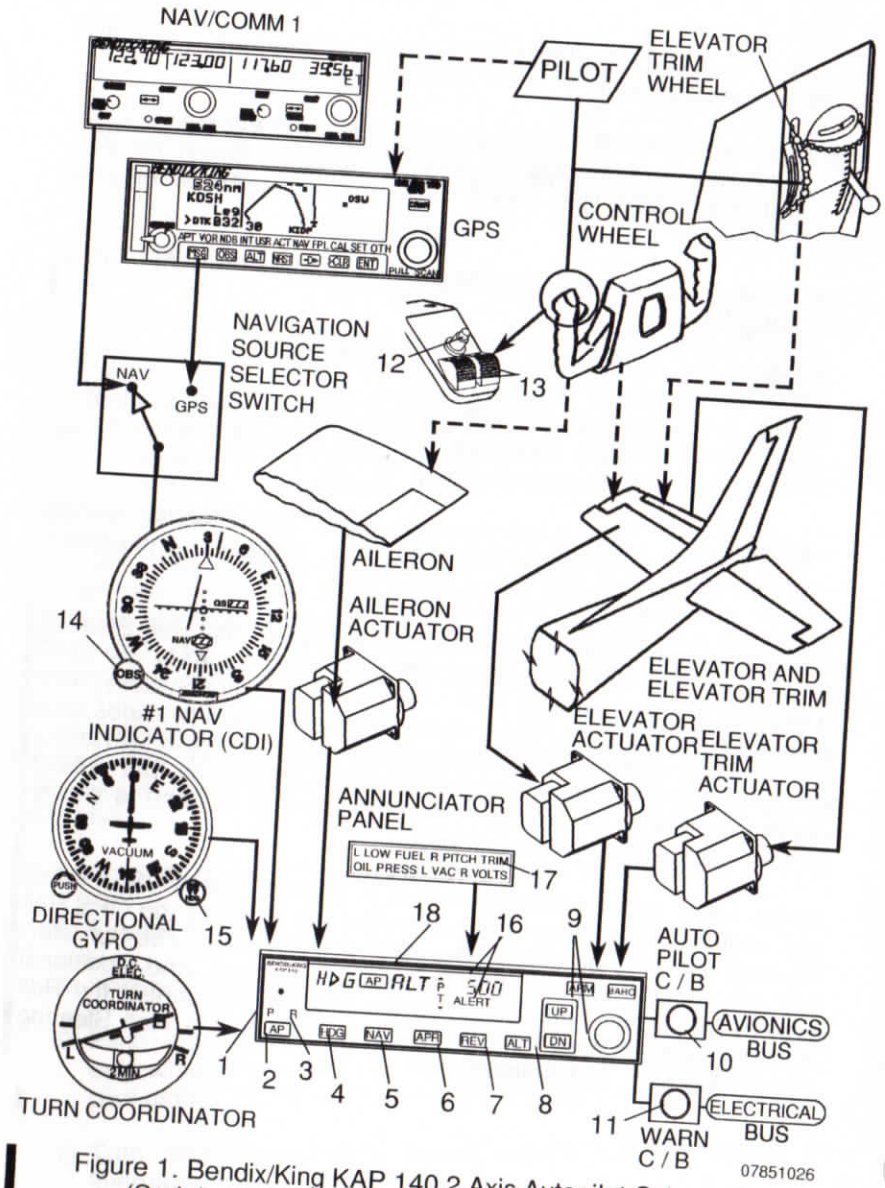

Figure 1. Bendix/King KAP 140 2 Axis Autopilot Schematic (Serials 172S8348 thru 172S9422) (Sheet 1 of 2)

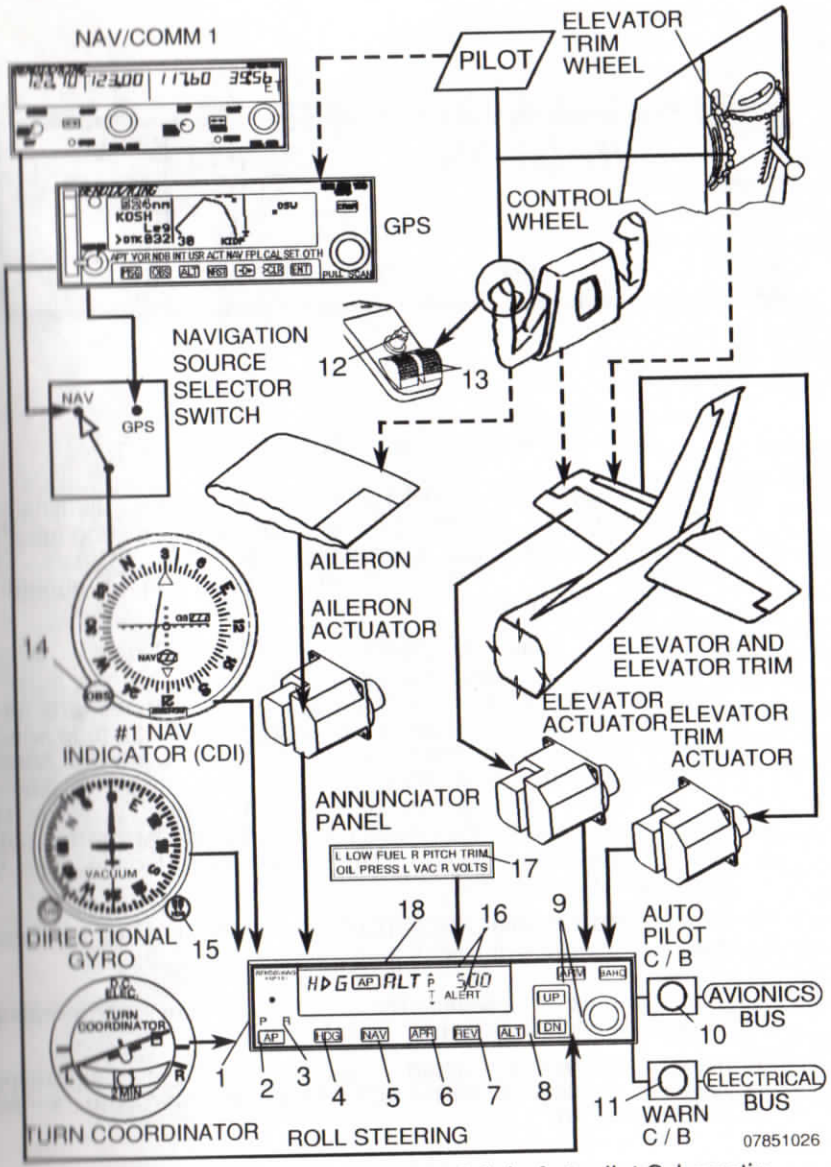

Figure 1. Bendix/King KAP 140 2 Axis Autopilot Schematic (Serials 172S9423 and On) (Sheet 2)

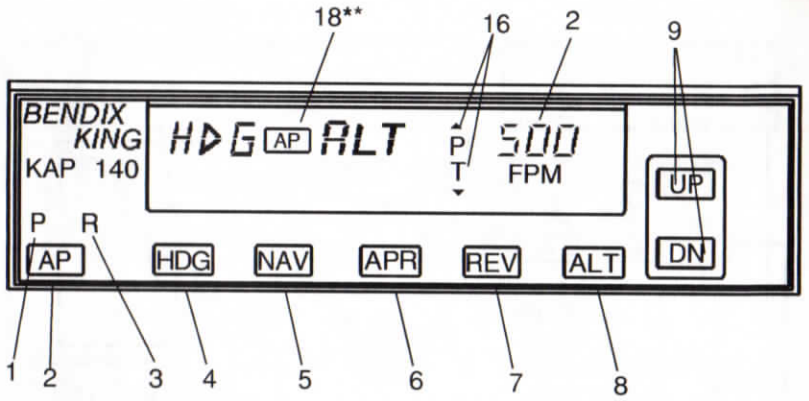

KAP 140 WITHOUT ALTITUDE PRESELECT

1. PITCH AXIS (P) ANNUNCIATOR -- When illuminated, indicates failure of pitch axis and will either disengage the autopilot or not allow engagement of the pitch axis. In turbulent air, will illuminate during abnormal vertical/accelerations.

2. AUTOPILOT ENGAGE/DISENGAGE (AP) BUTTON -- When pushed*, or pressed and held (approx. 0.25 seconds)**, engages autopilot if all preflight self-test conditions are met. The autopilot will engage in the basic roll (ROL) mode which functions as a wing leveler and the pitch axis vertical speed (VS) mode. The commanded vertical speed will be displayed in the upper right corner of autopilot display area. The captured VS will be the vertical speed present at the moment the AP button is pressed. The button may also be used to disengage the autopilot.

3. ROLL AXIS (R) ANNUNCIATOR -- When illuminated, indicates failure of the roll axis and disengages the autopilot.

* Airplane serials 172S8348 thru 172S9128 not incorporating Honeywell Service Bulletin KC140-M1.

** Airplane serials 172S8348 thru 172S9128 incorporating Honeywell Service Bulletin KC140-M1, and airplane serials 172S9129 and on.

Figure 2. Bendix/King KAP 140 2 Axis Autopilot, Operating Controls and Indicators (Sheet 1 of 4)

4. HEADING (HDG) MODE SELECTOR BUTTON -- When pushed, will select the Heading mode, which commands the airplane to turn to and maintain the heading selected by the heading bug on the Directional Gyro or HSI (if installed). A new heading may be selected at any time and will result in the airplane turning to the new heading. The button can also be used to toggle between HDG and ROL modes. For airplane serials 172S8348 thru 172S9128 not incorporating Honeywell Service Bulletin KC140-M1, this button can also be used to engage the autopilot in HDG mode.

5. NAVIGATION (NAV) MODE SELECTOR BUTTON -- When pushed, will select the Navigation mode. This mode provides automatic beam capture and tracking of VOR, LOC, or GPS signals as selected for presentation on the #1 CDI. NAV mode is recommended for enroute navigation tracking.

6. APPROACH (APR) MODE SELECTOR BUTTON -- When pushed, will select the Approach mode. This mode provides automatic beam capture and tracking of VOR, GPS, LOC and Glideslope (GS) on an ILS, as selected for presentation on #1 CDI. APR mode tracking sensitivity is recommended for instrument approaches.

7. BACK COURSE APPROACH (REV) MODE BUTTON -- This button is active only when the coupled navigation receiver is tuned to a LOC/ILS frequency. When pushed will select the Back Course approach mode. This mode functions identically to the approach mode except that the autopilot response to LOC signals is reversed. Glideslope is locked out with REV mode.

8. ALTITUDE HOLD (ALT) MODE SELECT BUTTON -- When pushed, will select the altitude hold mode. This mode provides capture and tracking of the selected altitude. The selected altitude is the airplane altitude at the moment the ALT button is pressed. If the ALT button is pressed with an established VS rate present, there will be about a 10% (of VS rate) overshoot. The airplane will return positively to the selected altitude. For airplane serials 172S8348 thru 172S9128 not incorporating Honeywell Service Bulletin KC140-M1, this button can also be used to engage the autopilot in ALT mode.

Figure 2. Bendix/King KAP 140 2 Axis Autopilot, Operating Controls and Indicators (Sheet 2)

9. VERTICAL SPEED (UP/DN) MODE BUTTONS -- The action of these buttons depends on the vertical mode present when pressed. If VS mode is active (AP plus any lateral mode) and the UP button is pressed, the autopilot will modify the displayed VS command (FPM) in the up direction. Single momentary cycles on either the UP or DN button will increment the VS command by 100 FPM per cycle. When either button is continuously held in, it will modify the vertical speed command by 300 fpm per second.

   If ALT mode is active, pressing the UP/DN buttons will modify the captured altitude by 20 feet per cycle, or if held continuously will command the airplane up or down at the rate of 500 FPM, synchronizing the ALT reference to the actual airplane altitude upon button release.

10. AUTO PILOT CIRCUIT BREAKER -- A 5-amp pull-off circuit breaker supplying 28 VDC to the KAP 140 system.

11. WARN C/B -- Power to the autopilot disconnect horn and the airplane's annunciator panel (PITCH TRIM).

12. AUTOPILOT DISCONNECT (A/P DISC/TRIM INT) SWITCH -- When depressed will disengage the autopilot and interrupt manual electric trim (MET) power. An autopilot disconnect will be annunciated by a continuous 2 second tone accompanied by flashing "AP" annunciations on the autopilot computer display.

13. MANUAL ELECTRIC TRIM (MET) SWITCHES -- When both switches are pressed in the same direction, the trim system will provide pitch trim in the selected direction. Use of manual electric trim during autopilot operation will disengage the autopilot.

Figure 2. Bendix/King KAP 140 2 Axis Autopilot, Operating Controls and Indicators (Sheet 3)

14. OMNI BEARING SELECT (OBS) KNOB -- Selects the desired course to be tracked by the autopilot. (Note: The HDG bug must also be positioned to the proper course to capture and track the selected radial or desired track).

15. HEADING SELECT KNOB (HDG) -- Positions the heading pointer ("bug") on the compass card. Note that the position of the heading bug also provides course datum to the autopilot when tracking in NAV, APR, or REV (BC) modes. This is in addition to its more intuitive use in the HDG mode.

16. PITCH TRIM (PT) Annunciator -- Indicates the direction of required pitch trim. The annunciation will flash if auto trim has not satisfied the request for trim for a period of 10 seconds. A solid $\frac{P}{T}$ without an arrowhead is an indication of a pitch trim fault. Refer to the EMERGENCY PROCEDURES for proper response to a pitch trim fault.

17. PITCH TRIM Annunciation (located on instrument panel or glareshield) -- Illuminates whenever the automated preflight self test detects a pitch trim fault or the continuous monitoring system detects a pitch trim fault in flight. Refer to the EMERGENCY PROCEDURES for proper response to a pitch trim fault.

**18. AUTOPILOT ENGAGE [AP] Annunciation -- Illuminates whenever the autopilot is engaged. Flashes during pilot initiated or automatic disengagement.

**Airplane serials 172S8348 thru 172S9128 incorporating Honeywell Service Bulletin KC140-M1, and airplane serials 172S9129 and on.

Figure 2. Bendix/King KAP 140 2 Axis Autopilot, Operating Controls and Indicators (Sheet 4)

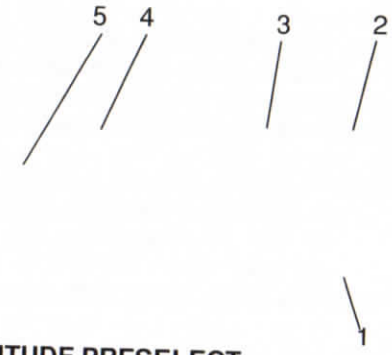

KAP 140 WITH ALTITUDE PRESELECT

NOTE

Numbered items apply to the KAP 140 with Altitude Preselect. Other controls and indicators shown are the same as those on the KAP 140 without Altitude Preselect (refer to Figure 2).

1. ROTARY KNOBS -- Used to set the altitude alerter reference altitude; or may be used immediately after pressing the BARO button, to adjust the autopilot baro setting to match that of the airplane's altimeter when manual adjustment is required. (In some systems, the baro setting may be automatically synched to that of the altimeter.)
2. BARO SET (**BARO**) BUTTON -- When pushed and released, will change the display from the altitude alerter selected altitude to the baro setting display (either IN HG or HPA) for 3 seconds. If pushed and held for 2 seconds, will change the baro setting display from IN HG to HPA or vice versa. Once the baro setting display is visible the rotary knobs may be used to adjust the baro setting.

Figure 3. Bendix/King KAP 140 2 Axis Autopilot with Altitude Preselect, Operating Controls and Indicators (Sheet 1 of 2)

3. ALTITUDE ARM (**ARM**) BUTTON -- When pushed, will toggle altitude arming on or off. When ALT ARM is annunciated, the autopilot will capture the altitude alerter displayed altitude (provided the airplane is climbing or descending in VS to the displayed altitude). ALT hold arming when the autopilot is engaged is automatic upon altitude alerter altitude selection via the rotary knobs. Note that the alerter functions are independent of the arming process thus providing full time alerting, even when the autopilot is disengaged.
4. ALTITUDE ALERTER/VERTICAL SPEED/BARO SETTING DISPLAY -- Normally displays the altitude alerter selected altitude. If the UP or DN button is pushed while in VS hold, the display changes to the command reference for the VS mode in FPM for 3 seconds. If the BARO button is pushed, the display changes to the autopilot baro setting in either IN HG or HPA for 3 seconds.

NOTE

This display may be dashed for up to 3 minutes on start up if a blind encoder is installed which requires a warm-up period.

5. ALTITUDE ALERT (**ALERT**) ANNUNCIATION -- Illuminates continuously in the region of from 200 to 1000 feet from the selected altitude if the airplane was previously outside of this region. Flashes (1) for two seconds the first time the airplane crossed the selected altitude and (2) continuously in the 200 to 1000 feet region if the airplane was previously inside of this region (i.e. at the selected altitude). Associated with the visual alerting is an aural alert (5 short tones) which occurs 1000 feet from the selected altitude upon approaching the altitude and 200 feet from the selected altitude on leaving the altitude.

Figure 3. Bendix/King KAP 140 2 Axis Autopilot with Altitude Preselect, Operating Controls and Indicators (Sheet 2)

SECTION 2
LIMITATIONS

The following autopilot limitations must be adhered to:

1. The entire preflight test procedure outlined under Section 4, paragraph A of this supplement, including steps 1 through 7, must be successfully completed prior to each flight. Use of the autopilot or manual electric trim system is prohibited prior to completion of these tests.
2. During autopilot operation, a pilot with seat belt fastened must be seated at the left pilot position.
3. The autopilot must be OFF during takeoff and landing.
4. KMA 28 audio amplifier PUSH OFF/EMG operation is prohibited during normal operations.

NOTE

During emergency operation of the audio amplifier, the PUSH OFF/EMG state of the KMA 28 will prevent flight control system alerts from being heard.

5. The system is approved for Category I operation only (Approach mode selected).
6. Autopilot maximum airspeed limitation -- 140 KIAS.
   Autopilot minimum airspeed limitation -- 70 KIAS.
   Autopilot minimum approach speed -- 80 KIAS.
7. Maximum flap extension -- 10°.
8. The autopilot must be disengaged below 200 feet AGL during approach operations and below 800 feet AGL for all other phases of flight.
9. Overriding the autopilot to change pitch or roll attitude is prohibited. (Disengage with A/P DISC/TRIM INT or AP select button.)
10. The AUTO PILOT circuit breaker must be pulled following any inflight illumination of the red "PITCH TRIM" warning annunciator (located on the airplane annunciator panel), but only after first completing the Emergency Procedures (Section 3, paragraph 1.). The manual electric trim and autopilot autotrim systems will be disabled with the AUTO PILOT circuit breaker pulled.

SECTION 3
EMERGENCY PROCEDURES

The four step procedure (steps A thru D) listed under paragraph 1 should be among the basic airplane emergency procedures that are committed to memory. It is important that the pilot be proficient in accomplishing all four steps without reference to this manual.

1. In case of Autopilot, Autopilot Trim, or Manual Electric Trim malfunction (accomplish Items A and B simultaneously):
   A. Airplane Control Wheel -- **GRASP FIRMLY** and regain aircraft control.
   B. **A/P DISC/TRIM INT** Switch -- **PRESS** and **HOLD** throughout recovery.
   C. AIRCRAFT -- **RE-TRIM** Manually as Needed.
   D. **AUTO PILOT** Circuit Breaker -- PULL.

NOTE

The **AVIONICS MASTER** Switch may be used as an alternate means of removing all electric power from the autopilot and electric trim systems. If necessary perform steps 1A thru 1C above, then turn the **AVIONICS MASTER** Switch OFF before locating and pulling the **AUTO PILOT** Circuit Breaker. Turn the **AVIONICS MASTER** Switch ON as soon as possible to restore power to all other avionics equipment. Primary attitude, airspeed, directional compass, and altitude instruments will remain operational at all times.

⚠ WARNING

DO NOT ATTEMPT TO RE-ENGAGE THE AUTOPILOT FOLLOWING AN AUTOPILOT, AUTOTRIM, OR MANUAL ELECTRIC TRIM MALFUNCTION UNTIL THE CAUSE FOR THE MALFUNCTION HAS BEEN CORRECTED.

Maximum Altitude losses due to autopilot malfunction:

CONFIGURATION	ALT. LOSS
Cruise, Climb, Descent	350 ft.
Maneuvering	100 ft.
Approach	90 ft.

AMPLIFIED EMERGENCY PROCEDURES

The following paragraphs are presented to supply additional information for the purpose of providing the pilot with a more complete understanding of the recommended course of action for an emergency situation.

1. An autopilot or autotrim malfunction occurs when there is an uncommanded deviation in the airplane flight path or when there is abnormal control wheel or trim wheel motion. In some cases, and especially for autopilot trim, there may be little to no airplane motion, yet the red **PITCH TRIM** annunciator (airplane annunciator panel) may illuminate and an alert tone may sound.

   The primary concern in reacting to an autopilot or autopilot trim malfunction, or to an automatic disconnect of the autopilot, is in maintaining control of the airplane. Immediately grasp the control wheel and press and hold down the A/P DISC/TRIM INT switch throughout the recovery. Manipulate the controls as required to safely maintain operation of the airplane within all of its operating limitations. Elevator trim should be used manually as needed to relieve control forces. **Locate and pull the AUTO PILOT circuit breaker** on the right hand circuit breaker panel to completely disable the autopilot system.

2. A manual electric trim malfunction may be recognized by illumination of the red **PITCH TRIM** annunciator, accompanied by an alert tone, or by unusual trim wheel motions with the autopilot OFF, without pilot actuation of the manual electric trim switches. As with an autopilot malfunction, the first concern following a manual electric trim malfunction is maintaining control of the airplane. Grasp the control wheel firmly and press and hold down the A/P DISC/TRIM INT switch. Locate and pull the AUTO PILOT circuit breaker on the right hand breaker panel.

3. Note that the emergency procedure for any malfunction is essentially the same: immediately grasp the control wheel and regain airplane control while pressing and holding the A/P DISC/TRIM INT switch down, and retrim the airplane as needed. After these steps have been accomplished secure the autopilot electric trim system by pulling the autopilot (AUTO PILOT) circuit breaker. As with any other airplane emergency procedure, it is important that the 4 steps of the emergency procedure located on Page 15 be committed to memory.

4. The AVIONICS MASTER switch may be used to remove all electric power from the Autopilot and Electric Trim systems while the circuit breaker is located and pulled. Return the AVIONICS MASTER switch to the ON position as soon as possible. With the AVIONICS MASTER switch off, all avionics and autopilot equipment will be inoperable.

5. It is important that all portions of the autopilot and electric trim system are preflight tested prior to each flight in accordance with the procedures published herein in order to assure their integrity and continued safe operation during flight.

⚠ WARNING

DO NOT RESET AUTOPILOT CIRCUIT BREAKER FOLLOWING AN AUTOPILOT/AUTOTRIM OR MANUAL ELECTRIC TRIM MALFUNCTION UNTIL THE CAUSE FOR THE MALFUNCTION HAS BEEN CORRECTED.

A flashing $\frac{P}{T}$ auto trim annunciation on the face of the autopilot indicates a failure of the auto trim function to relieve pitch servo loading in a timely manner. This condition should be temporary.

1. FLASHING $\frac{P}{T}$ ANNUNCIATION -- **OBSERVE** airplane pitch behavior. If pitch behavior is satisfactory, wait 5-10 seconds for the annunciation to stop.

2. If annunciation continues, Airplane Control Wheel -- **GRASP FIRMLY**, disengage the autopilot and check for an out of pitch trim condition. Manually retrim as required.

3. **AUTOPILOT OPERATION** -- **CONTINUE** if satisfied that the out of trim indication was temporary. **DISCONTINUE** if evidence indicates a failure of the auto trim function.

A red **P** or **R** on the face of the autopilot computer:

1. A red **P** is an indication that the pitch axis of the autopilot has been disabled and cannot be engaged. **DO NOT ENGAGE INTO A ROLL AXIS ONLY SYSTEM**.

NOTE

If the red **P** lamp was the result of some abnormal accelerations on the airplane, the annunciation should go out within approximately one minute and normal use of the autopilot will be re-established.

2. A red **R** is an indication that the roll axis of the autopilot has been disabled and cannot be engaged. The autopilot cannot be engaged again.

Flashing mode annunciation in the display of the autopilot computer:

1. Flashing **HDG** -- Indicates a failed heading. **PRESS HDG** button to terminate flashing. ROL will be displayed.

2. Flashing **NAV**, **APR** or **REV** -- Usually an indication of a flagged navigation source. PRESS the **NAV**, **APR** or **REV** button to terminate flashing. ROL will be displayed. (Select a valid navigation source.)

NOTE

A flashing NAV, APR or REV annunciation can also be caused by a failed heading valid input.

3. Flashing **GS** -- Indication of a flagged glideslope. (GS will rearm automatically if a valid GS signal is received.)

NOTE

- To continue tracking the localizer, observe the appropriate minimums for a nonprecision approach. (Press ALT twice in rapid succession to terminate the flashing. Control the pitch axis in the default VS mode.)

- At the onset of mode annunciator flashing, the autopilot has already reverted to a default mode of operation, i.e., ROL and or VS mode. An immediate attempt to reengage to lost mode may be made if the offending navigation, glideslope or compass flag has cleared.

EXCEPTION

The HDG annunciation will flash for 5 seconds upon selection of NAV, APR, or REV modes to remind the pilot to set the HDG bug for use as course datum.

Effects of instrument losses upon autopilot operation:

1. Loss of the artificial horizon -- no effect on the autopilot.
2. Loss of the turn coordinator -- autopilot inoperative.
3. Loss of the Directional Gyro (DG) -- The directional gyro does not provide any system valid flag. If the DG fails to function properly the autopilot heading and navigation mode will not function correctly. Under these conditions, the only usable lateral mode is ROL.
4. Loss of Horizontal Situation Indicator (HSI) (if installed) -- If the HSI fails to function properly the autopilot heading and navigation mode will not function correctly. Under these conditions, the only usable lateral mode is ROL.
5. Loss of Blind Altitude Encoder -- Altitude Alerter and Altitude Preselect function inoperative.

NOTE

The following procedures apply to airplane serials 172S8348 thru 172S9128 incorporating Honeywell Service Bulletin KC140-M1, and serials 172S9129 and on.

The following voice messages will be annunciated as conditions warrant:

1. **"TRIM IN MOTION"** - Elevator trim running for more than 5 seconds, message repeats every 5 seconds.
2. **"CHECK PITCH TRIM"** - An out of trim condition has existed for approximately 20 seconds, take immediate corrective action.

   a. Airplane Control Wheel -- GRASP FIRMLY and regain aircraft control.

   b. **A/P DISC/TRIM INT** Switch -- PRESS and HOLD throughout recovery.

   c. AIRPLANE -- **RETRIM** Manually as Needed.

   d. **AUTO PILOT** Circuit Breaker -- PULL.

SECTION 4
NORMAL PROCEDURES

A. PREFLIGHT (PERFORM PRIOR TO EACH FLIGHT):

1. **AVIONICS MASTER** SWITCH -- ON.
2. **POWER APPLICATION AND SELF-TEST** -- A self-test is performed upon power application to the computer. This test is a sequence of internal checks that validate proper system operation prior to allowing normal system operation. The sequence is indicated by "PFT" with an increasing number for the sequence steps. Successful completion of self-test is identified by all display segments being illuminated (Display Test), external "Pitch Trim" (A/C System Annunciator Panel) being illuminated, and the disconnect tone sounding.

NOTE

Upon applying power to the autopilot, the red P warning on the face of the autopilot may illuminate indicating that the pitch axis cannot be engaged. This condition should be temporary, lasting approximately 30 seconds. The P will extinguish and normal operation will be available.

⚠ WARNING

IF PITCH TRIM LIGHT STAYS ON, THEN THE AUTOTRIM DID NOT PASS PREFLIGHT TEST. THE AUTOPILOT CIRCUIT BREAKER MUST BE PULLED. MANUAL ELECTRIC TRIM AND AUTOPILOT ARE INOPERATIVE.

3. **MANUAL ELECTRIC TRIM** -- **TEST** as follows:

   a. LH SWITCH -- PUSH FORWARD to DN position and hold. OBSERVE NO MOVEMENT of Elevator Trim Wheel. Release switch to Center OFF Position.

NOTE

If movement of the elevator trim wheel is observed during a check of either LH or RH Switch, the manual electric trim system has malfunctioned. The flight may be continued if the AUTOPILOT Circuit Breaker is pulled to the OFF position and secured until repairs can be made.

   b. LH SWITCH -- PULL AFT to UP position and hold. OBSERVE NO MOVEMENT of the Elevator Trim Wheel. Release switch to center OFF position.

   c. RH SWITCH -- PUSH FORWARD to DN position and hold for 5 seconds. OBSERVE NO MOVEMENT of Elevator Trim Wheel. Verify red $\frac{P}{T}$ light on the autopilot display. Release switch to center OFF position.

NOTE

If red $\frac{P}{T}$ light is not observed after holding RH switch for 5 seconds, the trim monitor system has failed. The flight may be continued if the AUTOPILOT Circuit Breaker is pulled to the OFF position until repairs can be made.

d. RH SWITCH -- PULL AFT to UP position and hold for 5 seconds. OBSERVE NO MOVEMENT of Elevator Trim Wheel. Verify red $\frac{P}{T}$ on the autopilot display. Release switch to center OFF position.

e. LH and RH Switch -- PUSH FORWARD SIMULTANEOUSLY and HOLD. OBSERVE MOVEMENT of Elevator Trim Wheel in proper direction (nose down). While holding LH and RH Switches forward, PRESS and HOLD A/P DISC/TRIM INT Switch. OBSERVE NO MOVEMENT of Elevator Trim Wheel. Continue to hold LH and RH Switches forward and RELEASE A/P DISC/TRIM INT Switch. OBSERVE MOVEMENT of Elevator Trim Wheel in proper direction. Release LH and RH Switches to center OFF position.

NOTE

During Steps e. and f., verify movement of elevator trim tab in proper direction (the elevator trim tab will move up for nose down trim). If movement of Elevator Trim Wheel is observed while the A/P DISC/TRIM INT Switch is pressed, the manual electric trim system has failed. The flight may be continued if the AUTOPILOT Circuit Breaker is pulled to the OFF position until repairs can be made.

f. LH and RH Switch -- PULL AFT SIMULTANEOUSLY and HOLD. OBSERVE MOVEMENT of Elevator Trim Wheel in proper direction (nose up). While holding LH and RH Switches aft, PRESS and HOLD A/P DISC/TRIM INT Switch. OBSERVE NO MOVEMENT of Elevator Trim Wheel. Continue to hold LH and RH Switches aft and RELEASE A/P DISC/TRIM INT Switch. OBSERVE MOVEMENT of Elevator Trim Wheel in proper direction. Release LH and RH Switches to center OFF position.

4. **FLASHING BARO SETTING** (if installed) -- **SET** proper baro setting manually (or press BARO to accept the present value).
5. **AUTOPILOT** -- **ENGAGE** by pressing*, or pressing and holding** AP button.
6. **FLIGHT CONTROLS** -- **MOVE** fore, aft, left and right to verify the autopilot can be overpowered.
7. **A/P DISC/TRIM INT** Switch -- **PRESS**. Verify that the autopilot disconnects.
8. **TRIM** -- **SET** to take off position manually.

⚠ WARNING

- **THE PILOT IN COMMAND MUST CONTINUOUSLY MONITOR THE AUTOPILOT WHEN IT IS ENGAGED, AND BE PREPARED TO DISCONNECT THE AUTOPILOT AND TAKE IMMEDIATE CORRECTIVE ACTION -- INCLUDING MANUAL CONTROL OF THE AIRPLANE AND/OR PERFORMANCE OF EMERGENCY PROCEDURES -- IF AUTOPILOT OPERATION IS NOT AS EXPECTED OR IF AIRPLANE CONTROL IS NOT MAINTAINED.**

- **DURING ALL AUTOPILOT COUPLED OPERATIONS, THE PILOT IN COMMAND MUST USE PROPER AUTOPILOT COMMANDS AND USE THE PROPER ENGINE POWER TO ENSURE THAT THE AIRPLANE IS MAINTAINED BETWEEN 70 AND 140 KIAS, AND DOES NOT EXCEED OTHER BASIC AIRPLANE OPERATING LIMITATIONS.**

* Airplane serials 172S8348 thru 172S9128 not incorporating Honeywell Service Bulletin KC140-M1.

** Airplane serials 172S8348 thru 172S9128 incorporating Honeywell Service Bulletin KC140-M1, and airplane serials 172S9129 and on.

NOTE

Autopilot tracking performance will be degraded in turbulence.

At 172S Serial number 172S9423 and On, Roll Steering functionality enables the GPS navigation computer to control the autopilot and automatically perform course changes (turns) and intercept the course to the next active waypoint (when GPS is selected as the autopilot navigation source). The GPS navigation computer uses ground speed, track, and turn rate data to calculate the required bank angle for waypoint course changes. The GPS Roll Steering output will command the autopilot to turn and intercept the course to the new active waypoint without directly overflying the immediate waypoint (except designated flyover waypoints). Distance from the waypoint for the GPS to initiate the turn will vary with groundspeed, etc., but will usually be within one nautical mile of the waypoint. Sequencing to the next waypoint will occur approximately at the midpoint of the turn (transition segment).

Roll Steering is the default operating mode for the autoflight system when **all** of the following conditions are met:

1. The autopilot is engaged in NAV or APR mode.
2. GPS is selected as the autopilot navigation source.
3. The GPS navigation computer is executing an active flight plan.
4. The GPS is operating in LEG mode.

1. BEFORE TAKEOFF:

   a. **A/P DISC/TRIM INT** Switch -- **PRESS**.

   b. **BARO** setting (if installed) -- **CHECK**.

⚠ CAUTION

CONTINUE TO SET MANUALLY THROUGHOUT THE FLIGHT EACH TIME THE ALTIMETER BARO SETTING REQUIRES ADJUSTMENT. NO FURTHER REMINDERS (FLASHING) WILL BE GIVEN.

   c. **ALTITUDE SELECT** KNOB (if installed) -- **ROTATE** until the desired altitude is displayed.

NOTE

An altitude alert is annunciated 1000 ft. prior to arrival at the selected altitude. Airplane deviations greater than 200 feet above or below the selected altitude will produce an altitude alert. The alert annunciation is accompanied by a series of short tones.

2. AFTER TAKEOFF:

   a. Elevator Trim -- **VERIFY** or **SET** to place the airplane in a trimmed condition prior to autopilot engagement.

NOTE

Engaging the autopilot into a mistrim condition may cause unwanted attitude changes and a "TRIM FAIL" annunciation.

   b. Airspeed and Rate of Climb -- **STABILIZED**.

NOTE

Avoid autopilot engagement into a climb condition that either cannot be maintained, or is on the performance limits of the airplane for its power and weight configuration.

c. **AP** Button -- **PRESS*, or PRESS and HOLD****. Note **ROL** and **VS** annunciator on. If no other modes are selected the autopilot will operate in the ROL and VS modes.

⚠ WARNING

- **WHEN OPERATING AT OR NEAR THE BEST RATE OF CLIMB AIRSPEED, AT CLIMB POWER SETTINGS, AND USING VERTICAL SPEED (VS) MODE, CONTINUED OPERATION IN VERTICAL SPEED MODE CAN RESULT IN AN AIRPLANE STALL. IF NECESSARY, DISCONNECT THE AUTOPILOT AND RETURN THE AIRPLANE TO A STABILIZED CLIMB PRIOR TO RE-ENGAGMENT.**
- **WHEN OPERATING AT OR NEAR THE MAXIMUM AUTOPILOT SPEED, IT WILL BE NECESSARY TO REDUCE POWER IN ORDER TO MAINTAIN THE DESIRED RATE OF DESCENT AND NOT EXCEED THE MAXIMUM AUTOPILOT SPEED.**
- **DO NOT HELP THE AUTOPILOT OR HAND-FLY THE AIRPLANE WITH THE AUTOPILOT ENGAGED AS THE AUTOPILOT WILL RUN THE PITCH TRIM TO OPPOSE CONTROL WHEEL MOVEMENT. A MISTRIM OF THE AIRPLANE, WITH ACCOMPANYING LARGE ELEVATOR CONTROL FORCES, MAY RESULT IF THE PILOT MANIPULATES THE CONTROL WHEEL MANUALLY WHILE THE AUTOPILOT IS ENGAGED.**

* Airplane serials 172S8348 thru 172S9128 not incorporating Honeywell Service Bulletin KC140-M1.

** Airplane serials 172S8348 thru 172S9128 incorporating Honeywell Service Bulletin KC140-M1, and airplane serials 172S9129 and on.

3. CLIMB OR DESCENT:

   a. **BARO** setting (if installed) -- **CHECK**.

   b. Using Vertical Trim:

      1) **VERTICAL SPEED** Control -- **PRESS** either the **UP** or **DN** button to select aircraft vertical speed within the +1500 /-2000 ft. per min command limits.

      2) **VERTICAL SPEED** Control -- **RELEASE** when desired vertical speed is displayed. The autopilot will maintain the selected vertical speed.

NOTE

Avoid selecting a climb rate that either cannot be maintained or is on the performance limit of the airplane for its power and weight configuration.

4. ALTITUDE HOLD:

   a. Capture preselected altitudes (if installed):

      1) **ALTITUDE SELECT** knob -- **ROTATE** until the desired altitude is displayed. Note **ARM** annunciation occurs automatically with altitude selection when the autopilot is engaged.

      2) ALTITUDE SELECT MODE (**ARM**) button -- **PUSH** to alternately disarm or arm altitude capture.

      3) Airplane -- **ESTABLISH** vertical speed necessary to intercept the selected altitude.

NOTE

It may be possible to observe minor difference between the autopilots' selected altitude and the airplane altimeter after an altitude capture. These discrepancies are attributed to the autopilot and altimeter using different static sources combined with autopilot system tolerances. Not inputing the proper barometric setting into the autopilot computer will produce inaccuracies.

NOTE

Altitude preselect captures are not recommended on nonprecision approaches to capture the MDA. Glideslope coupling will preclude a preselect altitude capture on an ILS.

b. Altitude (**ALT**) Hold Button:

1) **ALT** Hold Selector Button -- **PRESS**. Note **ALT** hold annunciator **ON**. Autopilot will maintain the selected altitude.

NOTE

It is recommended by the FAA (AC00-24B) to use basic "PITCH ATTITUDE HOLD" mode during operation in severe turbulence. However, since this autopilot does **not** use the attitude gyro as a pitch reference, it is recommended that the autopilot be disconnected and that the airplane be flown by hand in severe turbulence.

c. Changing altitudes:

1) Using Vertical Speed (Recommended for altitude changes less than 100 ft.)

a) **VERTICAL SPEED** Control -- **PRESS** and **HOLD** either the **UP** or **DN** button. Vertical Speed will seek a rate of change of about 500 fpm.

b) **VERTICAL SPEED** Control -- **RELEASE** when desired altitude is reached. The autopilot will maintain the desired altitude.

NOTE

As an alternative, a series of quick momentary presses on the **UP** or **DN** button will program either an increase or decrease of the altitude reference, 20 feet each time the button is pressed.

5. HEADING HOLD:

a. Heading Selector Knob -- **SET BUG** to desired heading.

b. **HDG** Mode Selector Button -- **PRESS**. Note **HDG** mode annunciator **ON**. Autopilot will automatically turn the airplane to the selected heading.

NOTE

Airplane heading may change in ROL mode due to turbulence.

c. Heading Selector Knob -- **MOVE BUG** to the desired heading. Autopilot will automatically turn the airplane to the new selected heading.

6. NAV COUPLING:

a. When equipped with DG:

1) **OBS** Knob -- **SELECT** desired course.

2) **NAV** Mode Selector Button -- **PRESS**. Note **NAVARM** annunciated.

3) Heading Selector Knob -- **ROTATE BUG** to agree with **OBS** course.

NOTE

- When NAV is selected, the autopilot will flash HDG for 5 seconds to remind the pilot to reset the HDG bug to the OBS course. IF HDG mode was in use at the time of NAV button selection, a 45° intercept angle will then be automatically established based on the position of the bug.

- All angle intercepts compatible with radar vectors may be accomplished by selecting ROL mode PRIOR to pressing the NAV button. The HDG bug must still be positioned to agree with the OBS course to provide course datum to the autopilot when using a DG (Directional Gyro).

a) If the CDI needle is greater than 2 to 3 dots from center, the autopilot will annunciate **NAV$_{ARM}$**. When the computed capture point is reached the **ARM** annunciator will go out and the selected course will be automatically captured and tracked.

b) If the CDI needle is less than 2 to 3 dots from center, the HDG mode will disengage upon selecting NAV mode. The **NAV** annunciator will then illuminate and the capture/track sequence will automatically begin.

b. When equipped with HSI:

1) Course Bearing Pointer - **SET** to desired course.

2) Heading Selector Knob -- **SET BUG** to provide desired intercept angle and engage HDG mode.

3) **NAV** Mode Selector Button -- **PRESS**.

a) If the Course Deviation Bar (D-Bar) is greater than 2 to 3 dots from center, the autopilot will annunciate **NAV$_{ARM}$**. When the computed capture point is reached the **ARM** annunciator will go out and the selected course will be automatically captured and tracked.

b) If the D-Bar is less than 2 to 3 dots from center, the HDG mode will disengage upon selecting NAV mode. The **NAV** annunciator will then illuminate and the capture/track sequence will automatically begin.

When Roll Steering is in operation, adjusting or changing the position of the heading bug or the course pointer will have no effect on heading or course. It is recommended that both the heading bug and the course pointer (or NO. 1 OBS) always be set to the current course to enhance situational awareness, especially in the event of an unexpected autoflight equipment failure. GPS signal loss requires that the pilot immediately select an alternate autopilot operating mode (such as HDG) or select NAV (NAV1) as the autopilot navigation source. If autopilot function is lost, the pilot is required to resume manual control of the airplane. Keeping the heading bug and course pointer set to the present course makes immediate recovery easier.

Roll Steering will not function when the GPS is in OBS mode, when the autopilot is in HDG or ROL mode or when the autopilot is in NAV mode with NAV selected as the autopilot navigation source.

7. APPROACH (APR) COUPLING: (To enable glideslope coupling on an ILS and more precise tracking on instrument approaches).

Roll Steering will operate on instrument approach procedures selected from a current GPS aeronautical database **only** when:

- The autopilot is engaged in either NAV or APR mode.

AND

- GPS is selected as the autopilot NAV input.

Ensure that the appropriate GPS mode (LEG or OBS) is selected during each portion of the approach procedure.

a. When equipped with DG:

1) **BARO** setting -- **CHECK** (if installed).

2) **OBS** Knob -- **SELECT** desired approach course. (For a localizer, set it to serve as a memory aid.)

3) **APR** Mode Selector Button -- **PRESS**. Note **APR$_{ARM}$** annunciated.

4) Heading Selector Knob -- **ROTATE BUG** to agree with desired approach.

NOTE

- When APR is selected, the autopilot will flash HDG for 5 seconds to remind the pilot to reset the HDG bug to the approach course. If HDG mode was in use at the time of APR button selection, a 45° intercept angle will then be automatically established based on the position of the bug.

- All angle intercepts compatible with radar vectors may be accomplished by selecting ROL mode PRIOR to pressing the APR button. The HDG bug must still be positioned to agree with the desired approach course to provide course datum to the autopilot when using a DG.

  a) If the CDI needle is greater than 2 to 3 dots from the center, the autopilot will annunciate **APRARM**; when the computed capture point is reached the **ARM** annunciator will go out and the selected course will be automatically captured and tracked.

  b) If the CDI needle is less than 2 to 3 dots form the center, the HDG mode will disengage upon selecting APR mode; the **APR** annunciator will illuminate and the capture/track sequence will automatically begin.

b. When equipped with HSI:

1) **BARO** Setting (if installed) -- **CHECK**.

2) Course Bearing Pointer -- **SET** to desired course.

3) Heading Selector Knob -- **SET BUG** to provide desired intercept angle.

4) **APR** Mode Selector Button -- **PRESS**.

   a) If the D-Bar is greater than 2 to 3 dots from center, the autopilot will annunciate **APRARM**; when the computed capture point is reached the **ARM** annunciator will go out and the selected course will be automatically captured and tracked.

   b) If the D-Bar is less than 2 to 3 dots from center, the HDG mode will disengage upon selecting APR mode; the **APR** annunciator will illuminate and the capture/track sequence will automatically begin.

5) Airspeed -- **MAINTAIN** 90 KIAS minimum during coupled autopilot approaches (recommended).

8. BACK COURSE (REV) APPROACH COUPLING (i.e., reverse localizer):

a. When equipped with DG:

1) **BARO** setting (if installed) -- **CHECK**.

2) **OBS** Knob -- **SELECT** the localizer course to the front course inbound (as a memory aid).

3) **REV** Mode Selector Button -- **PRESS**.

4) Heading Selector Knob -- **ROTATE BUG** to the heading corresponding to the localizer front course inbound.

NOTE

- When REV is selected, the autopilot will flash HDG for 5 seconds to remind the pilot to reset the HDG bug to the localizer FRONT COURSE INBOUND heading. If heading mode was in use at the time of REV button selection, a 45° intercept angle will then be automatically established based on the position of the bug.

- All angle intercepts compatible with radar vectors may be accomplished by selecting ROL mode PRIOR to pressing the REV button. The HDG bug must still be positioned to the localizer FRONT COURSE INBOUND heading to provide course datum to the autopilot when using a DG.

  a) If the CDI needle is greater than 2 to 3 dots from center, the autopilot will annunciate **REV$_{ARM}$**; when the computed capture point is reached the **ARM** annunciator will go out and the selected back course will be automatically captured and tracked.

  b) If the CDI needle is less than 2 to 3 dots from center, the HDG mode will disengage upon selecting **REV** mode; the **REV** annunciator will illuminate and the capture/track sequence will automatically begin.

b. When equipped with HSI:

1) **BARO** Setting (if installed) -- **CHECK**.

2) Course Bearing pointer -- **SET** to the ILS front course inbound heading.

3) Heading Selector Knob -- **SET BUG** to provide desired intercept angle and engage HDG mode.

4) **REV** Mode Selector Button -- **PRESS**.

a) If the D-Bar is greater than 2 to 3 dots from center, the autopilot will annunciate **REV$_{ARM}$**; when the computed capture point is reached the **ARM** annunciator will go out and the selected back course will be automatically captured and tracked.

b) If the D-Bar is less than 2 to 3 dots from center, the HDG mode will disengage upon selecting **REV** mode; the **REV** annunciator will illuminate and the capture/track sequence will automatically begin.

5) Airspeed -- **MAINTAIN** 90 KIAS minimum during autopilot coupled approaches (recommended).

9. GLIDESLOPE COUPLING

a. **APR** Mode -- **ENGAGED**, Note **GS$_{ARM}$** annunciated.

NOTE

Glideslope coupling is inhibited when operating in NAV or REV modes. With NAV 1 selected to a valid ILS, glideslope armed and coupling occurs automatically in the APR mode when tracking a localizer.

b. At Glideslope centering -- note **ARM** annunciator goes out.

NOTE

Autopilot can capture glideslope from above or below the beam.

c. Airspeed -- **MAINTAIN** 90 KIAS minimum during autopilot coupled approaches (recommended).

10. MISSED APPROACH

a. **A/P DISC/TRIM INTER** Switch - **PRESS** to disengage **AP**.

b. **MISSED APPROACH - EXECUTE**.

c. If autopilot is desired:

1) Elevator Trim -- **VERIFY** or **SET**.

2) Airspeed and Rate of Climb -- **STABILIZED**.

NOTE

Avoid autopilot engagement into a climb condition that either cannot be maintained, or is on the performance limits of the airplane for its power and weight configuration.

3) AP Button -- **PRESS.** Note **ROL** and **VS** annunciators on. If no other modes are selected the autopilot will operate in the ROL and VS modes. Verify that the airplane Vertical Speed Indicator (VSI) and the Autopilot VS agree.

NOTE

If tracking the ILS course outbound as part of the missed approach procedure is desired, use the NAV mode to prevent inadvertent GS coupling.

11. BEFORE LANDING

a. **A/P DISC/TRIM INT** Switch -- **PRESS* or PRESS and HOLD**** to disengage AP.

SECTION 5
PERFORMANCE

There is no change to the airplane performance when the KAP 140 2 Axis Autopilot is installed.

* Airplane serials 172S8348 thru 172S9128 not incorporating Honeywell Service Bulletin KC140-M1.

** Airplane serials 172S8348 thru 172S9128 incorporating Honeywell Service Bulletin KC140-M1, and airplane serials 172S9129 and on.

Cessna
A Textron Company

Pilot's Operating Handbook and FAA Approved Airplane Flight Manual

CESSNA MODEL 172S

AIRPLANES 172S8372 AND ON

SUPPLEMENT 19

BENDIX/KING KLN 94
GLOBAL POSITIONING SYSTEM (IFR)

SERIAL NO._____

REGISTRATION NO._____

This supplement must be inserted into Section 9 of the Pilot's Operating Handbook and FAA Approved Airplane Flight Manual when the Global Positioning System is installed.

FAA APPROVAL

FAA APPROVED UNDER FAR 21 SUBPART J
The Cessna Aircraft Co.
Delegation Option Authorization DOA-100129-CE

Executive Engineer

Date: 14 December 2000

COPYRIGHT © 2000
CESSNA AIRCRAFT COMPANY
WICHITA, KANSAS, USA

172SPHUS-S19-04

Member of GAMA

6 November 2000

Revision 4 - 4 June 2003

SUPPLEMENT 19

BENDIX/KING KLN 94
GLOBAL POSITIONING SYSTEM (IFR)

Use the Log of Effective Pages to determine the current status of this supplement. Pages affected by the current revision are indicated by an asterisk (*) preceding the page number.

Supplement Status	Date
Original Issue	6 November 2000
Revision 1	18 December 2000
Revision 2	30 December 2000
Revision 3	22 January 2001
Revision 4	4 June 2003

LOG OF EFFECTIVE PAGES

Page Number	Page Status	Revision Number
* S19-1 thru S19-20	Revised	Revision 4
* S19-21/S19-22	Added	Revision 4

APPROVED BY

FAA APPROVED UNDER FAR 21 SUBPART J
The Cessna Aircraft Co.
Delegation Option Authorization DOA-100129-CE

Executive Engineer

DATE OF APPROVAL 06-04-03

SUPPLEMENT 19

BENDIX/KING KLN 94
GLOBAL POSITIONING SYSTEM (IFR)

SERVICE BULLETIN CONFIGURATION LIST

The following is a list of Service Bulletins that are applicable to the operation of the airplane, and have been incorporated into this supplement. This list contains only those Service Bulletins that are currently active.

Number	Title	Airplane Serial Effectivity	Revision Incorporation	Incorporated In Airplane

SUPPLEMENT 19

BENDIX/KING KLN 94
GLOBAL POSITIONING SYSTEM (IFR)

SECTION 1

GENERAL

The KLN 94 Global Positioning System (GPS) is a three-dimensional precision navigation system based on 24 earth orbiting satellites. Receiver Autonomous Integrity Monitoring (RAIM) is a function that every IFR-certified GPS receiver must continuously perform to assure position accuracy. RAIM is available when 5 or more of these satellites are in view, or 4 satellites are in view and a barometrically corrected altitude input from the airplane's altimeter is made. Annunciation is provided if there are not enough satellites in view to assure position integrity.

Operational guidance for the KLN 94 GPS Navigation System is provided with the Bendix/King KLN 94 Pilot's Guide (supplied with the airplane). This Pilot's Guide should be thoroughly studied and VFR operations conducted so that you are totally familiar with GPS navigation before actually using this equipment in IFR conditions.

At 172S serial number 172S9423 and On, automated Roll Steering functionality has been added to the Bendix/King KLN 94 GPS Navigation System and the KAP 140 2 Axis Autopilot System. Roll Steering coupling between the GPS and the Autopilot provides area navigation with automatic course changes at flight plan waypoints similar to Flight Management System (FMS) operations, but without vertical navigation capability. The Roll Steering function is similar to "turn anticipation" for the autopilot.

At the noted serial effectivity, the KLN 94 GPS (ORS 03 or later) has an added Roll Steering signal output. In order for the GPS Roll Steering output to be utilized, the KAP 140 Autopilot (-7904 or later) has an added input for the Roll Steering signal and additional system wiring has been added to the airplane to connect the Roll Steering signal output from the KLN 94 GPS to the Roll Steering input of the KAP 140 Autopilot.

Every 28 days, Bendix/King receives new aeronautical database information from Jeppesen Sanderson for each database region. This information is processed and downloaded onto the database cards. Bendix/King makes these database card updates available to KLN 94 GPS users.

The database card is an electronic memory containing information on airports, navaids, intersections, DPs, STARs, instrument approaches, special use airspace, and other items of interest to the pilot.

⚠ CAUTION

THE DATABASE MUST BE UPDATED ONLY WHILE THE AIRPLANE IS ON THE GROUND. THE KLN 94 DOES NOT PERFORM ANY NAVIGATION FUNCTION WHILE THE DATABASE IS BEING UPDATED.

NOTE

A current database is required by regulation in order to use the KLN 94 GPS system for non-precision approaches.

Provided the KLN 94 navigation system is receiving adequate usable signals, it has been demonstrated capable of and has been shown to meet the accuracy specifications of: VFR/IFR enroute oceanic and remote, enroute domestic, terminal, and instrument approach (GPS, Loran-C, VOR, VOR-DME, TACAN, NDB, NDB-DME, RNAV) operation within the U.S. National Airspace System, North Atlantic Minimum Navigation Performance Specifications (MNPS) Airspace and latitudes bounded by 74° North and 60° South using the WGS-84 (or NAD 83) coordinate reference datum in accordance with the criteria of AC 20-138, AC 91-49, and AC 120-33. Navigation data is based upon use of only the global positioning system (GPS) operated by the United States.

NOTE

- Airplanes using GPS for oceanic IFR operations may use the KLN 94 to replace one of the other approved means of long range navigation. A single KLN 94 GPS installation may also be used on short oceanic routes which require only one means of long-range navigation.

- FAA approval of the KLN 94 does not necessarily constitute approval for use in foreign airspace.

- The KLN 94 is qualified for BRNAV (Basic Area Navigation) operation in the European region in accordance with the criteria of AC 90-96. (Reference ICAO Doc 7030 Regional Supplementary Procedures, JAA Technical Guidance Leaflet AMJ20X2 and Eurocontrol RNAV Standard Doc 003-93 Area Navigation Equipment Operational Requirements and Functional Requirements (RNAV).)

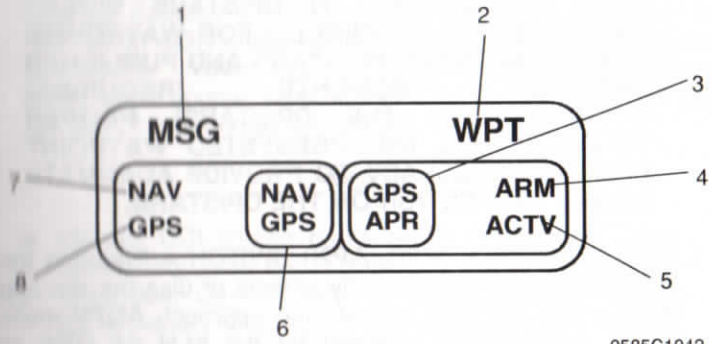

1. GPS MESSAGE **(MSG)** ANNUNCIATOR LIGHT -- **MSG** will begin flashing whenever the message prompt (a large "M" on the left side of the screen) on the KLN 94 GPS unit begins flashing to alert the pilot that a message is waiting. Press the Message (**MSG**) key on the GPS to display the message. If a message condition exists which requires a specific action by the pilot, the message annunciator will remain on but will not flash.

2. GPS WAYPOINT **(WPT)** ANNUNCIATOR LIGHT -- GPS WAYPOINT annunciator will begin to flash approximately 36 seconds prior to reaching a Direct-To waypoint. Also, when turn anticipation is enabled in the KLN 94 GPS unit, the annunciator will begin to flash 20 seconds prior to the beginning of turn anticipation, then illuminate steady at the very beginning of turn anticipation.

Figure 1. GPS Annunciator/Switch
(Serials 172S8372 thru 172S8703) (Sheet 1 of 3)

⚠ WARNING

TURN ANTICIPATION IS AUTOMATICALLY DISABLED FOR FAF WAYPOINTS AND THOSE USED EXCLUSIVELY IN DP/STARS WHERE OVERFLIGHT IS REQUIRED. FOR WAYPOINTS SHARED BETWEEN DP/STARS AND PUBLISHED ENROUTE SEGMENTS (REQUIRING OVERFLIGHT IN THE DP/STARS), PROPER SELECTION ON THE PRESENTED WAYPOINT PAGE IS NECESSARY TO PROVIDE ADEQUATE ROUTE PROTECTION ON THE DP/STARS.

3. GPS APPROACH (**GPS**, **APR**) SWITCH -- Pressing the GPS APPROACH switch manually selects or disarms the approach **ARM** mode and also cancels the approach **ACTV** mode after being automatically engaged by the KLN 94 GPS system. The white background color of the GPS APPROACH annunciator makes it visible in daylight.

4. **ARM** ANNUNCIATOR LIGHT -- **ARM** annunciator will illuminate when the KLN 94 GPS system automatically selects the approach ARM mode or when the approach ARM mode is manually selected. The approach ARM mode will be automatically selected when the airplane is within 30 NM of an airport, and an approach is loaded in the flight plan for that airport. The approach ARM mode can manually be selected at a greater distance than 30 NM from the airport by pressing the GPS APPROACH switch; however, this will not change the CDI scale until the airplane reaches the 30 NM point. The approach ARM mode can also be disarmed by pressing the GPS APPROACH switch.

5. ACTIVE (**ACTV**) ANNUNCIATOR LIGHT -- **ACTV** annunciator will illuminate when the KLN 94 GPS system automatically engages the approach ACTV mode (the ACTV mode can only be engaged by the KLN 94 GPS system which is automatic). To cancel the approach ACTV mode, press the GPS APPROACH switch; this will change the mode to the approach ARM mode and illuminate the **ARM** annunciator.

Figure 1. GPS Annunciator/Switch
(Serials 172S8372 thru 172S8703) (Sheet 2 of 3)

6. **NAV/GPS** SWITCH -- Toggles from Nav 1 to GPS and vice versa to control the type of navigation data to be displayed on the Course Deviation Indicator (CDI). The No. 1 CDI Omni Bearing Selector (OBS) provides analog course input to the KLN 94 in OBS mode when the **NAV/GPS** switch/annunciator is in **GPS**. When the **NAV/GPS** switch annunciation is in **NAV**, GPS course selection in OBS mode is digital through the use of the controls and display at the KLN 94.

NOTE

- Manual CDI course centering in **OBS** mode using the control knob can be difficult, especially at long distances. Centering the Course Deviation Indicator (CDI) needle can best be accomplished by pressing the Direct-To button and then manually setting the No. 1 CDI course to the course value prescribed in the KLN 94 displayed message.
- The Directional Indicator heading (HDG) bug must also be set to provide proper course datum to the autopilot if coupled to the KLN 94 in **LEG** or **OBS**. (When the optional HSI is installed, the HSI course pointer provides course datum to the autopilot.)

7. NAVIGATION SOURCE (**NAV**) ANNUNCIATOR -- The **NAV** annunciator will illuminate steady to inform the pilot that NAV 1 information is being displayed on the NAV 1 CDI.

8. NAVIGATION SOURCE (**GPS**) ANNUNCIATOR -- The **GPS** annunciator will illuminate steady to inform the pilot that GPS information is being displayed on the NAV 1 CDI.

Figure 1. GPS Annunciator/Switch
(Serials 172S8372 thru 172S8703) (Sheet 3 of 3)

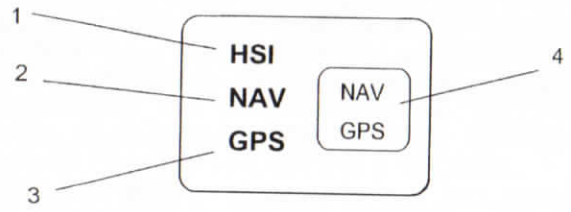

1. HSI ANNUNCIATOR LIGHT -- This label is present when the optional HSI is installed. The HSI course pointer provides course datum to the autopilot.

2. NAVIGATION SOURCE (**NAV**) ANNUNCIATOR -- The **NAV** annunciator will illuminate steady to inform the pilot that NAV 1 information is being displayed on the NAV 1 CDI.

3. NAVIGATION SOURCE (**GPS**) ANNUNCIATOR -- The **GPS** annunciator will illuminate steady to inform the pilot that GPS information is being displayed on the NAV 1 CDI.

4. **NAV/GPS** SWITCH -- Toggles from Nav 1 to GPS and vice versa to control the type of navigation data to be displayed on the CDI (Course Deviation Indicator). The No. 1 CDI Omni Bearing Selector (OBS) provides analog course input to the KLN 94 in OBS mode when the **NAV/GPS** switch/annunciator is in **GPS**. When the **NAV/GPS** switch annunciation is in **NAV**, GPS course selection in OBS mode is digital through the use of the controls and display at the KLN 94.

Figure 2. GPS Annunciator/Switch
(Serials 172S8704 and On) (Sheet 1 of 2)

NOTE

- Manual CDI course centering in **OBS** mode using the control knob can be difficult, especially at long distances. Centering the Course Deviation Indicator (CDI) needle can best be accomplished by pressing the Direct-To button and then manually setting the No. 1 CDI course to the course value prescribed in the KLN 94 displayed message.

- The Directional Indicator heading (HDG) bug must also be set to provide proper course datum to the autopilot if coupled to the KLN 94 in **LEG** or **OBS**. (When the optional HSI is installed, the HSI course pointer provides course datum to the autopilot.)

Figure 2. GPS Annunciator/Switch
(Serials 172S8704 and On) (Sheet 2 of 2)

SECTION 2
LIMITATIONS

1. The KLN 94 GPS Pilot's Guide, P/N 006-18207-0000, dated September 2000 (or later applicable revision) must be available to the flight crew whenever IFR GPS navigation is used. The Operational Revision Status (ORS) of the Pilot's Guide must match the ORS level annunciated on the Self-Test page.

2. Navigation is prohibited within 60 nautical miles of the North and South Poles (i.e., at greater than 89° north and south latitude).

3. IFR Navigation is restricted as follows:

   a. The system must utilize ORS level 01 or later FAA approved revision.

   b. The data on the Self-Test page must be verified prior to use.

   c. IFR enroute and terminal navigation is prohibited unless the pilot verifies the currency of the database or verifies each selected waypoint for accuracy by reference to current approved data.

   d. Instrument approaches must be accomplished in accordance with approved instrument approach procedures that are retrieved from the KLN 94 database. The KLN 94 aeronautical database must incorporate the current update cycle.

      1) The KLN 94 Quick Reference, P/N 006-18228-0000, Revision 1, dated August 2000 (or later applicable revision) must be available to the flight crew during instrument approach operations.

      2) Instrument approaches must be conducted in the approach mode and RAIM must be available at the Final Approach Fix.

      3) APR ACTV mode must be annunciated at the Final Approach Fix.

      4) Accomplishment of ILS, LOC, LOC-BC, LDA, SDF, and MLS approaches are not authorized.

      5) When an alternate airport is required by the applicable operating rules, it must be served by an approach based on other than GPS or Loran-C navigation.

      6) The KLN 94 can only be used for approach guidance if the reference coordinate datum system for the instrument approach is WGS-84 or NAD-83. (All approaches in the KLN 94 database use the WGS-84 or the NAD-83 geodetic datum.)

   e. For BRNAV operations in the European region:

      1) With 23 (24 if the altitude input to the KLN 94 is not available) or more satellites projected to be operational for the flight, the airplane can depart without further action.

      2) With 22 (23 if the altitude input to the KLN 94 is not available) or fewer satellites projected to be operational for the flight, the availability of the GPS integrity (RAIM) should be confirmed for the intended flight (route and time). This should be obtained from a prediction program run outside of the airplane. The prediction program must comply with the criteria of Appendix 1 of AC 90-96. In the event of a predicted continuous loss of RAIM of more than 5 minutes for any part of the intended flight, the flight should be delayed, cancelled, or rerouted on a track where RAIM requirements can be met.

   f. If a "RAIM NOT AVAILABLE" message is displayed in the enroute or terminal phase of flight, continue to navigate using the KLN 94 or revert to an alternate means of navigation appropriate to the route and phase of flight. When continuing to use the KLN 94 for navigation, position must be verified every 15 minutes (or as required by applicable country's operating rules) using another IFR approved navigation system.

NOTE

Honeywell's Preflight, Version 2.0 or later computer based prediction program may be used for the RAIM prediction. Alternate methods should be submitted for approval in accordance with Advisory Circular AC 90-96.

g. The airplane must have other approved navigation equipment appropriate to the route of flight installed and operational.

SECTION 3
EMERGENCY PROCEDURES

There are no changes to the basic airplane emergency procedures when the KLN 94 GPS is installed.

1. If the KLN 94 GPS information is not available or invalid, utilize remaining operational navigation equipment as required.

2. If a "RAIM NOT AVAILABLE" message is displayed while conducting an instrument approach, terminate the approach. Execute a missed approach if required.

3. If a "RAIM NOT AVAILABLE" message is displayed in the en route or terminal phase of flight, continue to navigate using the KLN 94 or revert to an alternate means of navigation appropriate to the route and phase of flight. When continuing to use the KLN 94 for navigation, position must be verified every 15 minutes (or as required by applicable country's operating rules) using another IFR approved navigation system.

4. Refer to the KLN 94 Pilot's Guide, Appendices B and C, for appropriate pilot actions to be accomplished in response to annunciated messages.

SECTION 4
NORMAL PROCEDURES

OPERATION

Normal operating procedures are outlined in the KLN 94 GPS Pilot's Guide, P/N 006-18207-0000, dated September 2000 (or later applicable revision). A KLN 94 Quick Reference, P/N 006-18228-0000, dated August 2000 (or later applicable revision) containing an approach sequence, operating tips and approach related messages is intended as well for cockpit use by the pilot familiar with KLN 94 operations when conducting instrument approaches.

AUTOPILOT COUPLED OPERATION

The KLN 94 may be coupled to the KAP 140 autopilot when engaged in NAV mode by selecting **GPS** on the NAV/GPS switch. Manual selection of the desired course on the NO. 1 OBS or HSI course pointer is required to provide course datum to the KAP 140 autopilot. (Frequent course datum changes may be necessary, such as in the case of flying a DME arc.) The autopilot approach mode (APR) should be used when conducting a coupled GPS approach.

NOTE

NAV or APR coupled DME arc intercepts can result in excessive overshoots (aggravated by high ground speeds and/or intercepts from inside the arc).

At 172S serial number 172S9423 and On, Roll Steering functionality enables the GPS navigation computer to control the autopilot and automatically perform course changes (turns) and intercept the course to the next active waypoint (when GPS is selected as the autopilot navigation source). The GPS navigation computer uses ground speed, track and turn rate data to calculate the required bank angle for waypoint course changes. The GPS Roll Steering output will command the autopilot to turn and intercept the course to the new active waypoint without directly overflying the immediate waypoint (except designated flyover waypoints). Distance from the waypoint for the GPS to initiate the turn will vary with ground speed, etc., but will usually be within one nautical mile of the waypoint. Sequencing to the next waypoint will occur approximately at the midpoint of the turn (transition segment).

Roll Steering is the default operating mode for the autoflight system when all of the following conditions are met:

1. The autopilot is engaged in NAV or APR mode
2. GPS is selected as the autopilot navigation source
3. The GPS navigation computer is executing an active flight plan
4. The GPS is operating in LEG mode.

When Roll Steering is in operation, adjusting or change in the position of the heading bug or the course pointer will have no effect on heading or course. It is recommended that both the heading bug and the course pointer always be set to the current course to enhance situational awareness, especially in the event of unexpected autoflight equipment failure. GPS signal loss requires that the pilot immediately select an alternate autopilot navigation source. If autopilot function is lost, the pilot is required to resume manual control of the airplane. Keeping the heading bug and course pointer set to the present course makes immediate recovery easier.

Roll Steering will not function when the GPS is in OBS mode, when the autopilot is in HDG or ROL mode or when the autopilot is in NAV mode with NAV selected as the autopilot navigation source.

APPROACH MODE SEQUENCING AND RAIM PREDICTION

⚠ WARNING

FAMILIARITY WITH THE ENROUTE OPERATION OF THE KLN 94 DOES NOT CONSTITUTE PROFICIENCY IN APPROACH OPERATIONS. DO NOT ATTEMPT APPROACH OPERATIONS IN IMC (INSTRUMENT METEOROLOGICAL CONDITIONS) PRIOR TO ATTAINING PROFICIENCY IN THE USE OF THE KLN 94.

NOTE

The special use airspace alert will automatically be disabled prior to flying an instrument approach to reduce the potential for message congestion.

Roll Steering will operate on instrument approach procedures selected from a current GPS aeronautical database only when:

- The autopilot is engaged in either NAV or APR mode

AND

- GPS is selected as the autopilot NAV input. Ensure that the appropriate GPS mode (LEG or OBS) is selected during each portion of the approach procedure.

1. Prior to arrival, select a STAR if appropriate from the **APT 7** page. Select an approach and an initial approach fix (IAF) from the **APT 8** page. The most efficient means of getting to these pages is initiated by pressing the **PROC** (PROCEDURE) button on the KLN 94.

   a. Press **PROC** button.
   b. Select **Approach**, **Arrival** or **Departure**.
   c. Select the airport from the list or enter the desired airport identifier.
   d. The **APT 7** or **APT 8** page will be displayed as appropriate.

NOTE

To delete or replace a DP, STAR or approach, select **FPL 0** page. Place the cursor over the name of the procedure, press **ENT** to change it, or **CLR** then **ENT** to delete it.

2. En route, check for RAIM availability at the destination airport ETA on the **OTH 3** page.

NOTE

RAIM must be available at the FAF in order to fly an instrument approach. Be prepared to terminate the approach upon loss of RAIM.

3. At or within 30 nm from the airport:

   a. Verify automatic annunciation of APRARM.
   b. Note automatic CDI needle scaling change from ±5.0 nm to ±1.0 nm over the next 30 seconds.
   c. Update the KLN 94 altimeter baro setting as required.
   d. Internally the KLN 94 will transition from en route to terminal integrity monitoring.

4. Select **NAV 4** page to fly the approach procedure.

   a. If receiving radar vectors, or need to fly a procedure turn or holding pattern, fly in OBS until inbound to the FAF.

NOTE

OBS navigation is TO-FROM (like a VOR) without waypoint sequencing.

   b. If receiving radar vectors, choose **VECTORS** as the IAF, activate vectors when the first vector for the approach is received and leave the unit in **LEG** mode.

   c. **NoPT** routes including DME arc's are flown in **LEG**. LEG is mandatory from the FAF to the MAP.

NOTE

NAV or APR coupled DME arc intercepts can result in excessive overshoots (aggravated by high ground speeds and/or intercepts from inside the arc).

⚠ WARNING

FLYING FINAL OUTBOUND FROM AN OFF-AIRPORT VORTAC ON AN OVERLAY APPROACH; BEWARE OF THE DME DISTANCE INCREASING ON FINAL APPROACH, AND THE GPS DISTANCE-TO-WAYPOINT DECREASING, AND NOT MATCHING THE NUMBERS ON THE APPROACH PLATE.

5. At or before 2 nm from the FAF inbound:

   a. Select the FAF as the active waypoint, if not accomplished already.
   b. Select LEG operation.

6. Approaching the FAF inbound (within 2 nm):

   a. Verify APR ACTV.
   b. Note automatic CDI needle scaling change from ±1.0 nm to ±0.3 nm over the 2 nm inbound to the FAF.
   c. Internally the KLN 94 will transition from terminal to approach integrity monitoring.

7. Crossing the FAF and APR ACTV is not annunciated:

   a. Do not descend.
   b. Execute the missed approach.

8. Missed Approach:

   a. Climb.
   b. Navigate to the MAP (in APR ARM if APR ACTV is not available).

NOTE

There is no automatic LEG sequencing at the MAP.

   c. After climbing in accordance with the published missed approach procedure, press the Direct To button, verify or change the desired holding fix and press **ENT**.

GENERAL NOTES

- The aeronautical database must be up to date for instrument approach operation.
- Only one approach can be in the flight plan at a time.
- Checking RAIM prediction for your approach while enroute using the **AUX 3** page is recommended. A self check occurs automatically within 2 nm of the FAF. APR **ACTV** is inhibited without RAIM.
- Data cannot be altered, added to or deleted from the approach procedures contained in the database. (DME arc intercepts may be relocated along the arc through the **NAV 4** or the **FPL 0** pages.)
- **Some approach waypoints do not appear on the approach plates (including in some instances the FAF).**
- Waypoint suffixes in the flight plan:
  - i -- IAF
  - f -- FAF
  - m -- MAP
  - h -- missed approach holding fix.
- The DME arc IAF (arc intercept waypoint) will be on your present position radial off the arc VOR when you load the IAF into the flight plan, or the beginning of the arc if currently on a radial beyond the arc limit. To adjust the arc intercept to be compatible with a current radar vector, bring up the arc IAF waypoint in the **NAV 4** page scanning field or under the cursor on the **FPL 0** page, press **CLR**, then **ENT**. Fly the arc in LEG. Adjust the heading bug (if autopilot coupled) and CDI course with reference to the desired track value on the **NAV 4** page (it will flash to remind you). Left/right CDI needle information is relative to the arc. Displayed distance is not along the arc but direct to the active waypoint. (The DME arc radial is also displayed in the lower right corner of the **NAV 4** page.)

- The DME arc IAF identifier may be unfamiliar. Example: D098G where 098 stands for the 098° radial off the referenced VOR, and G is the seventh letter in the alphabet indicating a 7 DME arc.
- APRARM to APR **ACTV** is automatic provided that:
  a. You are in APRARM (normally automatic).
  b. You are in **LEG** mode.
  c. The **FAF** is the active waypoint.
  d. Within 2 nm of the FAF.
  e. Outside of the FAF.
  f. Inbound to the FAF.
  g. RAIM is available.
- Direct-To operation between the FAF and MAP cancels APR **ACTV**. Fly the missed approach in APRARM.
- Flagged navigation inside the FAF may automatically bring up the message page stating:

  PRESS **PROC** BUTTON NOW FOR NAVIGATION

  Pressing the **PROC** button will usually restore navigation (not guaranteed) by changing from APR **ACTV** to APR **ARM**. Fly the missed approach.
- The instrument approach using the KLN 94 may be essentially automatic starting 30 nm out (with a manual baro setting update) or it may require judicious selection of the OBS and LEG modes.

SECTION 5
PERFORMANCE

There is no change to the airplane performance when this avionics equipment is installed. However, installation of an externally-mounted antenna or related external antennas, will result in a minor reduction in cruise performance.

Cessna
A Textron Company

Pilot's Operating Handbook and FAA Approved Airplane Flight Manual

CESSNA MODEL 172S

AIRPLANES 172S8704 AND ON

SUPPLEMENT 20

BENDIX/KING KMA 28 AUDIO SELECTOR PANEL

SERIAL NO. _____

REGISTRATION NO. _____

This supplement must be inserted into Section 9 of the Pilot's Operating Handbook and FAA Approved Airplane Flight Manual.

FAA APPROVAL

FAA APPROVED UNDER FAR 21 SUBPART J
The Cessna Aircraft Co.
Delegation Option Authorization DOA-100120-CE

Executive Engineer

Date: January 9, 2001

Member of GAMA

30 December 2000

SUPPLEMENT 20

ENDIX/KING KMA 28 AUDIO SELECTOR PANEL

The following Log of Effective Pages provides the date of issue for original and revised pages, as well as a listing of all pages in the Supplement. Pages which are affected by the current revision will carry the date of that revision

Revision Level	Date of Issue
0 (Original)	Dec. 30, 2000

LG OF EFFECTIVITY PAGES

PGE	DATE	PAGE	DATE
Te (S20-1)	Dec 30/00	S20-7	Dec 30/00
S)-2	Dec 30/00	S20-8	Dec 30/00
S)-3	Dec 30/00	S20-9	Dec 30/00
S)-4	Dec 30/00	S20-10	Dec 30/00
S)-5	Dec 30/00	S20-11	Dec 30/00
S)-6	Dec 30/00	S20-12	Dec 30/00

SRVICE BULLETIN CONFIGURATION LIST

The following is a list of Service Bulletins that are applicable to the operation of the airplane, and have been incorporated into this supplement. This list contains only those Service Bulletins that are currently active.

Imber	Title	Airplane Unit Effectivity	Revision Incorporation	Incorporated In Airplane

SUPPLEMENT

BENDIX/KING KMA 28 AUDIO SELECTOR PANEL

SECTION 1
GENERAL

The Bendix/King KMA 28 Audio Selector Panel is a combination audio selector panel, cabin intercom, audio amplifier and marker beacon receiver. The audio amplifier powers the cockpit overhead speaker when selected.

Receiver audio is selected using ten back-lit pushbutton switches. Selected receivers can be identified by the illuminated green LED on the appropriate switch pushbutton. The rotary microphone selector switch automatically supplies the audio for the transceiver selected; The Com 1 and Com 2 switches permit the user to monitor or "guard" the audio from the other transceiver. All operating controls are shown and described in Figure 1.

An unamplified and unswitched stereo audio input is provided for an entertainment audio source (Walkman or similar Portable Electronic Device (PED)). The Entertainment audio input is located on the lower half of the cockpit center pedestal; the 3.5 mm stereo jack is labeled "AUX AUDIO IN". The KMA 28 includes the Soft Mute feature that lowers the audio level of the entertainment signal whenever radio or intercom audio is present. Refer to 14 CFR Part 91.21 and Advisory Circular No. 91.21-1() "Use of Portable Electronic Devices Aboard Aircraft" for further information and requirements regarding the use of portable electronic devices in aircraft.

The cabin intercom uses the Intellivox™ automatic squelch circuit to minimize non-voice signals. The intercom audio level is set using the front-mounted intercom volume control; audio levels for the receivers and entertainment are controlled at the source.

NOTE

In this stereo installation, all headset locations are wired in parallel. If a monaural headset is plugged in at any location, one intercom channel will be shorted. Although no damage to the intercom will result, all stereo headset users will lose one audio channel. The monaural headset will perform normally.

A crystal-controlled superheterodyne marker beacon receiver with 3-light presentation is incorporated within the unit. Dimming circuitry for the marker beacon lamps automatically adjusts brightness appropriate to the cockpit ambient light level. HI and LO sensitivity and lamp test/receiver audio mute (T/M) functions are also provided.

Light dimming for the audio control panel is manually controlled by the RADIO light rheostat knob.

MARKER FACILITIES

MARKER	IDENTIFYING TONE	LIGHT*
Inner, Airway & Fan	Continuous 6 dots/sec (3000 Hz)	White
Middle	Alternate dots and dashes (1300 Hz)	Amber
Outer	2 dashes/sec (400 Hz)	Blue

*When the identifying tone is keyed, the respective indicating light will blink accordingly.

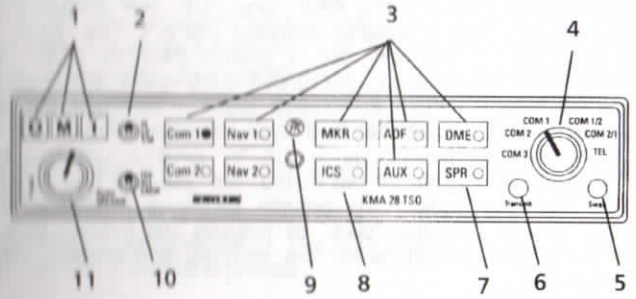

1. MARKER BEACON ANNUNCIATOR LIGHTS -- The three-light marker beacon receiver built into the KMA 28 gives a visual and aural signal when the ship's antenna passes over a 75 MHz beacon. The blue, amber, and white lights on the faceplate, as well as the audio tones, identify the beacon type.

   OUTER [O] -- Light illuminates blue to indicate passage of outer marker beacon.

   MIDDLE [M] -- Light illuminates amber to indicate passage of middle marker beacon.

   INNER, AIRWAY and FAN [I] -- Light illuminates white to indicate passage of ILS inner, airway or fan marker beacons.

2. MARKER BEACON SENSITIVITY & TEST/MUTE SELECT SWITCH -- The three-position switch is used to set the receiver sensitivity and to test the annunciator lamps. When this switch is on "HI" (upper) position, the high sensitivity is selected which permits you to hear the outer marker tone about a mile out. At this point you may select the "LO" (middle) position to give you a more accurate location of the Marker. When used only for approach markers, many pilots choose to leave the switch in the LO sensitivity position. The "T/M" (bottom) position is a momentary switch that will illuminate all three lamps simultaneously to assure they are in working order. This switch also has a Marker Beacon "mute" function. Pushing the switch to the T/M position while receiving a marker beacon signal will cause the audio to be temporarily silenced. No action is required to restore the audio in time for the next beacon.

Figure 1. Bendix/King KMA 28 Audio Selector Panel (Sheet 1 of 5)

3. RECEIVE AUDIO SELECT BUTTONS -- Push button audio selection is available for two Communications receivers ("COM 1", "COM 2"), two Navigation receivers ("NAV 1" and "NAV 2"), the internal Marker Beacon receiver ("MKR"), one DME, one ADF, one additional auxiliary receiver ("AUX") and a speaker amplifier ("SPR"). The "AUX" position could be used, for example, for a second DME or ADF. When a receiver's audio is selected, the green annunciator illuminates at the side of the button. Push the button again to deselect the receiver's audio. These buttons are "latched" type switches. When one of these buttons is pressed, it will stay in the "in" position until the button is pressed again and it will be put in the "out" position and removes that receiver from the audio. To provide additional feedback for button operation, activate the key "click" by pushing and holding both COM 1 and COM 2 receiver buttons for five seconds, and release. Repeat to defeat the click.

4. MICROPHONE SELECTOR SWITCH (MIC) -- Used to select the desired transmitter for the cockpit microphones. The "COM 1", "COM 2", and "COM 3" positions are for transmitting on the Com 1, Com 2, and Com 3 communications transceivers, respectively. When the mic selector switch is in the COM 1 position, both pilot and copilot will be connected to the COM 1 transceiver. Only the person who presses their Push-to-Talk (PTT) switch, will be heard over the aircraft radio. Turning the rotary switch to the COM 2 position will place pilot and copilot on COM 2. The KMA 28 gives priority to the pilot's PTT. If the copilot is transmitting, and the pilot presses his PTT, the pilot's microphone will be heard over the selected COM transmitter. Turning the mic selector counterclockwise to COM 3 places both the pilot and copilot on COM 3. Com 3 receiver audio is automatically placed in the headset (and speaker if selected). COM 1 and/or COM 2 receiver audio can be selected to monitor those transceivers. Audio from the selected transceiver is automatically heard in the headsets. This function can be checked by switching from COM 1 to COM 2 and watching the selected audio light on the selector change from COM 1 to COM 2. This ensures the pilot will always hear the audio from the transceiver he is transmitting on. When transmitting, the COM 1 or COM 2 LED audio selector will blink as a further indication of the selected transmitter. When switching the mic selector switch from COM 1 to COM 2, if the COM 1 audio has been selected, COM 1 audio will continue to be heard. When switching from COM 1 to COM 2 if COM 1 has NOT been selected, COM 1 audio will be switched off.

Figure 1. Bendix/King KMA 28 Audio Selector Panel (Sheet 2 of 5)

TELEPHONE MODE (TEL) - The telephone mode is not available on this installation.

SPLIT MODE (COM 1/2 OR COM 2/1) -- Moving the mic selector switch to COM 1/2 places the KMA 28 into "split mode". This places the pilot on Com 1 and the copilot on Com 2. Switching to COM 2/1 will reverse the "split mode" radio selection. For more information regarding split mode operations, consult the Bendix/King Silver Crown Plus Avionics Systems Pilot's Guide, P/N 006-18110-0000.

5. SWAP INDICATOR -- The swap function is not available on this installation.

6. TRANSMIT INDICATOR -- This indicator illuminates when either Push-to-Talk (PTT) switch is pressed.

7. SPEAKER SWITCH (SPR) -- This switch will place all selected audio on the cockpit speaker when selected.

8. CREW ICS/MUSIC 1 MUTE BUTTON (ICS) -- The front panel ICS button controls muting of the entertainment source. Pushing this button places the ICS in Karaoke (or sing along) mode, which inhibits the soft mute feature. The soft mute feature assures that the aircraft radio transmissions will not be missed due to entertainment playing. When there is radio reception or intercom conversation, the music level is dropped to background level. When the radio or intercom traffic ceases, the level gradually returns to normal. Karaoke allows the music to continue uninterrupted by intercom or radio traffic when cockpit workload is appropriate. Pushing the button again will release the mute inhibit function.

In split mode, the pilot and copilot are isolated from each other on the intercom, simultaneously using their respective radios. Depressing the ICS button in split mode will activate VOX intercom between the pilot and copilot positions. This permits intercommunication when desired between the crew. Pressing the ICS button again disables the crew intercom function.

9. PHOTOCELL FOR AUTOMATIC DIMMING OF MARKER BEACON LIGHTS AND SELECT BUTTON -- The photocell in the faceplate automatically dims the marker lights as well as the green annunciators in the Speaker Audio Select Buttons for night operation.

Figure 1. Bendix/King KMA 28 Audio Selector Panel (Sheet 3 of 5)

10. INTERCOM MODE SELECT (ISO-ALL-CREW) -- A three-position mode switch that allows the pilot to tailor the intercom function to best meet the current cockpit situation.

ISO -- (Up Position) The pilot is isolated from the intercom and is connected only to the aircraft radio system. The pilot will hear the aircraft radio reception (and sidetone during radio transmissions). The copilot will hear passenger's intercom and Entertainment, while passengers will hear copilot intercom and Entertainment. Neither will hear aircraft radio receptions or pilot transmissions.

ALL -- (Middle Position) All parties will hear the aircraft radio and intercom. Crew will hear Entertainment, passengers will hear Entertainment. During any radio or intercom communications, the music volume automatically decreases. The music volume increases gradually back to the original level after communications have been completed.

CREW -- (Down Position) Pilot and copilot are connected on one intercom channel and have exclusive access to the aircraft radios. They may also listen to Entertainment. Passengers can continue to communicate among themselves without interrupting the crew and also may listen to Entertainment. Anytime the KMA 28 is in either the COM 1/2 or COM 2/1 split modes, the pilot and copilot intercom is controlled with the ICS button. The passengers will maintain intercommunications, but never hear aircraft radios.

MODE	PILOT HEARS	COPILOT HEARS	PASSENGER HEARS	COMMENTS
Isolate	A/C Radios Pilot Sidetone (during radio transmission) Entertainment is Muted	Copilot and passenger intercom Entertainment	Passenger and Copilot intercom Entertainment	This mode allows the pilot to communicate without the others bothered by the conversations. Copilot and passengers can continue to communicate and listen to music.
All	Pilot Copilot A/C Radio Passengers Entertainment	Copilot Pilot A/C Radio Passengers Entertainment	Passengers Pilot Copilot A/C Radio Entertainment	This mode allows all to hear radio reception as well as communicate on the intercom. Music and intercom is muted during intercom and radio communications.
Crew	Pilot Copilot A/C Radio Entertainment	Copilot Pilot A/C Radio Entertainment	Passengers Entertainment	This mode allows the pilot and copilot to concentrate on flying while the passengers can communicate amongst themselves.

Figure 1. Bendix/King KMA 28 Audio Selector Panel (Sheet 4 of 5)

11. VOLUME CONTROL/POWER SWITCH/EMERGENCY OPERATION KNOB -- The KMA 28 unit is turned on and off by pushing the volume knob. In the OFF or EMG (Emergency) position, the pilot is connected directly to Com 1. This allows communication capability regardless of unit condition. Any time power is removed or turned off, the audio selector will be placed in the emergency mode. The power switch also controls the audio selector panel functions, intercom, and marker beacon receiver. Unless the mic selector is in Com 3 mode, at least one of the selected audio LED's will be on (Com 1 or Com 2). Turn the outer area of the knob to adjust the loudness of the intercom for the pilot and copilot only. It has no effect on selected radio levels, music input levels or passenger's volume level. Adjust the radios and intercom volume for a comfortable listening level for the pilot. Passenger volume can be adjusted at the headset. All passenger headsets are connected in parallel. Therefore, if a monaural headset is plugged into a stereo KMA 28 installation, one channel will be shorted. Although no damage to the unit will occur, all passengers will lose one channel.

NOTE

During KMA 28 operation in the OFF or EMG position, the audio is disabled preventing installed system alerts (autopilot disconnect tone) from being heard. The marker beacon receiver audio and annunciator lights will be inoperative.

Figure 1. Bendix/King KMA 28 Audio Selector Panel (Sheet 5 of 5)

SECTION 2
LIMITATIONS

1. PUSH OFF/EMG operation is prohibited during normal operations.

2. Use of the Entertainment audio input (and PED) is prohibited during takeoff and landing.

3. Use of the Entertainment audio input (and PED) is prohibited under IFR unless the operator of the aircraft has determined that the use of the 12 VDC power supply and the connected portable electronic device(s) will not cause interference with the navigation or communication system of the airplane.

NOTE

During KMA 28 operation in the OFF or EMG position, the audio is disabled preventing installed system alerts (autopilot disconnect tone) from being heard. The marker beacon receiver audio and annunciator lights will be inoperative.

SECTION 3
EMERGENCY PROCEDURES

In the event of a failure of the KMA 28, as evidenced by the inability to transmit in COM 1, 2 or 3.

1. Volume Control/Power Switch/Emergency Operation Knob -- Push OFF.

NOTE

This action bypasses the KMA 28 and connects the pilot's mic/headset directly to COM 1.

SECTION 4
NORMAL PROCEDURES

AUDIO CONTROL SYSTEM OPERATION:

1. MIC Selector Switch -- Turn to desired transmitter.

2. SPEAKER and Audio Select Button(s) -- SELECT desired receiver(s).

NOTES

Rotation of the MIC selector switch selects the Com audio automatically.

MARKER BEACON RECEIVER OPERATION:

1. TEST Position -- HOLD toggle down momentarily to verify all lights are operational.

2. SENS Selections -- Select HI sensitivity for airway flying or LO for ILS/LOC approaches.

The Entertainment audio input ("AUX AUDIO IN") is unswitched, so there is no means of deselecting the entertainment source except by unplugging the Audio Input connector. In the event of failure of the "Soft Mute" function or during periods of high pilot workload and/or heavy radio traffic, it may be wise to disable the Entertainment audio to eliminate a source of distraction for the flight crew.

NOTE

Use caution with audio cables in the cabin to avoid entangling occupants or cabin furnishings and to prevent damage to cables.

NOTE

Disconnect the audio cable from the Entertainment audio input jack whenever the PED is not in use.

NOTE

Passenger briefing should specify that Entertainment audio input (and PED) use is permitted only during the enroute phase of flight.

SECTION 5
PERFORMANCE

There is no change to the airplane performance when this avionic equipment is installed. However, the installation of an externally mounted antenna or related external antennas, will result in a minor reduction in cruise performance.

Cessna
A Textron Company

Pilot's Operating Handbook and FAA Approved Airplane Flight Manual

CESSNA MODEL 172S

AIRPLANES 172S8704 AND ON

SUPPLEMENT 21

BENDIX/KING KMD 550 MULTI-FUNCTION DISPLAY

SERIAL NO._____

REGISTRATION NO._____

This supplement must be inserted into Section 9 of the Pilot's Operating Handbook and FAA Approved Airplane Flight Manual when the KMD 550 Multi-Function Display is installed.

FAA APPROVAL

FAA APPROVED UNDER FAR 21 SUBPART J
The Cessna Aircraft Co.
Delegation Option Authorization DOA-100129-CE

Executive Engineer

Date: January 9, 2001

Member of GAMA

30 December 2000

COPYRIGHT © 2000
CESSNA AIRCRAFT COMPANY
WICHITA, KANSAS, USA

172SPHUS-S21-00

SUPPLEMENT 21

BENDIX/KING KMD 550 MULTI-FUNCTION DISPLAY

The following Log of Effective Pages provides the date of issue for original and revised pages, as well as a listing of all pages in the Supplement. Pages which are affected by the current revision will carry the date of that revision

Revision Level	Date of Issue
0 (Original)	Dec. 30, 2000

LOG OF EFFECTIVITY PAGES

PAGE	DATE	PAGE	DATE
Title (S21-1)	Dec 30/00	S21-6	Dec 30/00
S21-2	Dec 30/00	S21-7	Dec 30/00
S21-3	Dec 30/00	S21-8	Dec 30/00
S21-4	Dec 30/00	S21-9	Dec 30/00
S21-5	Dec 30/00	S21-10 blank	Dec 30/00

SERVICE BULLETIN CONFIGURATION LIST

The following is a list of Service Bulletins that are applicable to the operation of the airplane, and have been incorporated into this supplement. This list contains only those Service Bulletins that are currently active.

Number	Title	Airplane Unit Effectivity	Revision Incorporation	Incorporated In Airplane

SUPPLEMENT

BENDIX/KING KMD 550 MULTI-FUNCTION DISPLAY

SECTION 1
GENERAL

⚠ WARNING

NEVER REMOVE THE DATABASE CARD WHILE THE UNIT IS SWITCHED ON AND NEVER ATTEMPT TO SWITCH THE UNIT ON WHEN THERE IS NO DATABASE CARD INSTALLED.

The KMD 550 is a multi-function display that combines an internal aeronautical and cartographic database with external GPS data to display current aircraft position on a 5-inch diagonal screen. In addition to position, the KMD 550 can display weather avoidance information when optional sensor equipment is installed. The KMD 550 is powered from the AVIONICS MASTER BUS 1 switch and is current-protected by the GPS circuit breaker.

The KMD 550 is operated via a joystick, a series of five Power Keys that are located along the right side of the unit, a series of Function Select Keys located along the bottom, and an inner and outer Control Knob. The joystick allows movement of the pointer in MAP mode and is used to select and change setup fields. The appropriate key labels for a particular page are configured in software and displayed alongside the appropriate key. The rotary brightness control is used for adjusting the brightness of the screen.

Operational guidance for the KMD 550 Multi-function Display is provided with the Bendix/King KMD 550 Pilot's Guide (supplied with the airplane). This Pilot's Guide provides a detailed explanation of each of the display screen pages, with a step-by-step tutorial on each of them.

NOTE

The KMD 550 is designed to be used as a supplemental navigation system. You should always carefully compare indications from your KMD 550 unit with the information available from all other navigation sources including NDB's, VOR's, DME's, visual sightings, charts, etc. For safety, any discrepancies observed should be resolved immediately.

⚠ CAUTION

THIS EQUIPMENT IS NOT A REPLACEMENT FOR YOUR CHART. IT IS INTENDED AS AN AID TO NAVIGATION ONLY.

⚠ WARNING

NEVER USE THE WEATHER DISPLAYED ON THIS EQUIPMENT AS YOUR SOLE REFERENCE FOR WEATHER AVOIDANCE.

CHANGING THE DATABASE CARD

To change the data card follow these simple steps:

1. Turn off the KMD 550.
2. Grasp the data card and pull it straight out of it's socket.
3. With the card facing upward, as indicated on its label, insert the new data card being careful to align the card with the socket then press the new card firmly into place.
4. Turn the unit on and check for correct operation. If the new data card contains a newer version of operating software the unit will update the operating system to this newer version. Status bars will be displayed during the update process.

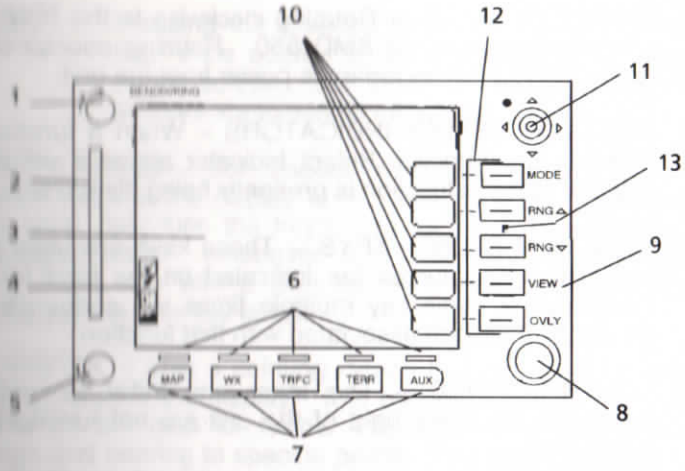

1. BRIGHTNESS CONTROL -- Clockwise rotation will increase the brightness of the display. Counter-clockwise rotation decreases the display brightness.
2. DATABASE CARD -- The database card contains the aeronautical and topographical database for the KMD 550. Updated database cards are available by subscription every 28 days. The KMD 550 is not an IFR primary-means-of-navigation system. Therefore, its use as an advisory navigation system does not mandate that the database be current. However, it is strongly recommended from a safety viewpoint that you continue to keep your database current.
3. DISPLAY -- The KMD 550 utilizes a 5" diagonal, color active matrix liquid crystal display.
4. AVAILABLE FUNCTIONS LEGEND -- These icons indicate what functions are available and their current status. The icons shown depend on what optional sensor equipment is installed and how it is configured.

Figure 1. Bendix/King KMD 550 Multi-Function Display
(Sheet 1 of 3)

5. ON/OFF CONTROL -- Rotating clockwise to the "ON" position provides power to the KMD 550. Rotating counter-clockwise to the "OFF" position removes power from the unit.

6. FUNCTION SELECT INDICATORS -- When a function key is pressed, the Function Select Indicator above it will illuminate to show that this function is presently being displayed.

7. FUNCTION SELECT KEYS -- These keys are used to select available data sources (as indicated on the key) for display. Pressing the same key multiple times will sequence through the available pages associated with that function.

8. CONTROL KNOB -- The inner and outer Control Knobs, located in the lower right of the unit are not functional in this installation.

9. POWER LABELS -- When the Power Label is illuminated on the right side of the key, that key's function is dedicated to the function described by the label and that function is active. The following is a list of the dedicated functions:

MODE -- Pressing this key will sequence through all available modes associated with the displayed page.

RNG△ -- Pressing this key will increase the range scale one level on the displayed page. Range scales on other pages will not be affected.

RNG▽ -- Pressing this key will decrease the range scale one level on the displayed page. Range scales on other pages will not be affected.

VIEW -- Pressing this key will sequence through the available views associated with the displayed page.

Figure 1. Bendix/King KMD 550 Multi-Function Display
(Sheet 2 of 3)

OVLY -- Pressing the Overlay Key allows data from more than once source to be displayed simultaneously on the screen. Soft labels will indicate which data sources are available for overlay.

10. SOFT LABELS -- Soft Labels are located to the left of the Power Keys in the display area. The description indicated in the label describes the key's present function related to the displayed page. Whenever a new function is selected, by pressing a key with a Soft Label, a new display is shown along with its new key labels.

11. JOYSTICK -- This a pointing device that moves a mouse-like pointer around the display. It is primarily used for pointing at items on the map for further information and for measuring range and bearing to specific points. The joystick is also used to modify configuration settings on the AUX setup pages.

12. POWER KEYS -- These five keys are used to manipulate the page being displayed. Their present functionality can be indicated by the use of Soft Labels on the left side of the key or Power Labels on the right side of the key.

13. FAULT INDICATOR -- The Fault Indicator is located between the Range buttons. If this small "F" is illuminated, a system hardware problem exists. This could be caused by the unit failing a self-test or an improper installation configuration. If the Fault Indicator appears, cycle the unit power. If the fault reoccurs, the unit needs to be taken to an authorized service center to correct the configuration or repair the unit.

NOTE

If the fault indicator is lit, refer to KMD 550 Pilot's Guide for service instructions.

Figure 1. Bendix/King KMD 550 Multi-Function Display
(Sheet 3 of 3)

STARTUP DISPLAY

This display will be seen after power-up. The Stormscope logo will be present if a Stormscope is installed and enabled. The self-test results are also displayed. Pressing the OK soft key will show the next display. The expiration date of the Jeppesen database must be acknowledged by again pressing the OK soft key.

POP-UP HELP DISPLAYS

Pop-up status displays are shown if a Function Key or available Power Key is pressed and held for longer than two seconds. These can help provide a reference for monitoring the status of selected functions and overlays.

GPS DATA SOURCES

The KMD 550 accepts GPS data from the KLN 94. The active flight plan and waypoints are imported directly from the KLN 94.

DISPLAY ICONS

When showing any map screen - airports, navaids, towns, intersections, user waypoints and many other data classes are represented by symbols or icons, some of which are user selectable in the Map Setup Screens. Please refer to Map Setup in the Getting Started section of the KMD 550 Pilot's Guide for further details.

SECTION 2
LIMITATIONS

The KMD 550 Multi-Function Display Pilot's Guide must be readily available to the flight crew when operating the KMD 550.

SECTION 3
EMERGENCY PROCEDURES

There is no change to the airplane emergency procedures when the KMD 550 Multi-Function Display is installed.

SECTION 4
NORMAL PROCEDURES

There is no change to the airplane normal procedures when the KMD 550 Multi-Function Display is installed.

SECTION 5
PERFORMANCE

There is no change to the airplane performance when the KMD 550 Multi-Function Display is installed.

Cessna
A Textron Company

Pilot's Operating Handbook and FAA Approved Airplane Flight Manual

CESSNA MODEL 172S

AIRPLANES 172S8704 AND ON

SUPPLEMENT 22

12 VOLT CABIN POWER SYSTEM

SERIAL NO. _____

REGISTRATION NO. _____

This supplement must be inserted into Section 9 of the Pilot's Operating Handbook and FAA Approved Airplane Flight Manual when the 12 Volt Cabin Power System is installed.

FAA APPROVAL

FAA APPROVED UNDER FAR 21 SUBPART J
The Cessna Aircraft Co.
Delegation Option Authorization DOA-100129-CE

Executive Engineer

Date: January 9, 2001

Member of GAMA

30 December 2000

SUPPLEMENT 22

12 VOLT CABIN POWER SYSTEM

The following Log of Effective Pages provides the date of issue for original and revised pages, as well as a listing of all pages in the Supplement. Pages which are affected by the current revision will carry the date of that revision

Revision Level	Date of Issue
0 (Original)	Dec. 30/00

LOG OF EFFECTIVITY PAGES

PAGE	DATE	PAGE	DATE
Title (S22-1)	Dec 30/00	S22-5	Dec 30/00
S22-2	Dec 30/00	S22-6	Dec 30/00
S22-3	Dec 30/00	S22-7	Dec 30/00
S22-4	Dec 30/00	S22-8 blank	Dec 30/00

SERVICE BULLETIN CONFIGURATION LIST

The following is a list of Service Bulletins that are applicable to the operation of the airplane, and have been incorporated into this supplement. This list contains only those Service Bulletins that are currently active.

Number	Title	Airplane Unit Effectivity	Revision Incorporation	Incorporated In Airplane

SUPPLEMENT

12 VOLT CABIN POWER SYSTEM

SECTION 1
GENERAL

The 12 Volt Cabin Power System provides passenger access to a fixed direct current (DC) voltage for powering portable electronic devices (PED). The remote power outlet (RPO), labeled "CABIN PWR 12V", is located on the lower portion of the cockpit center pedestal (See Figure 1). The RPO conforms to ARINC 628 Part 2 requirements for commercial airline in-seat power connectors, except that the Cabin Power System supplies automotive-type 12 VDC, in lieu of the 15 VDC provided by the airlines.

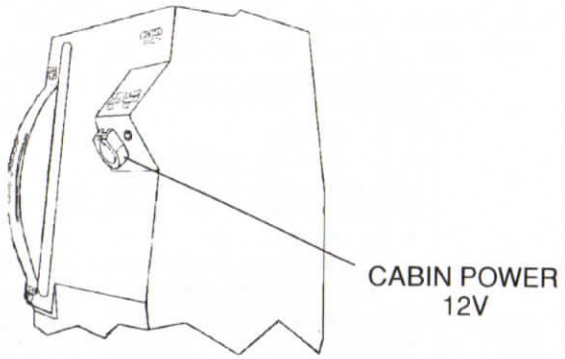

Figure 1. 12 Volt Cabin Power System Connector

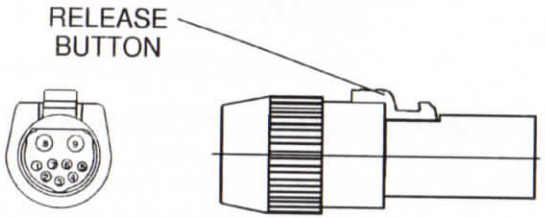

Figure 2. Mating Plug

The mating plug is a plastic 9-pin circular connector with a quick disconnect push button release (Hypertronics D02PBMRTH-0025 or equivalent) (See Figure 2). Adapter cable assemblies are available that feature the ARINC 628 plug with a standard automotive cigarette lighter socket (Radio Shack, Cat. No. 270-1580 or similar). Most laptop computer manufacturers and a number of accessory manufacturers (Absolute Battery, Mobility Electronics, USI, Extended Microdevices, etc.) can provide suitable power cables for these devices. A light-colored mating plug is preferred for visibility.

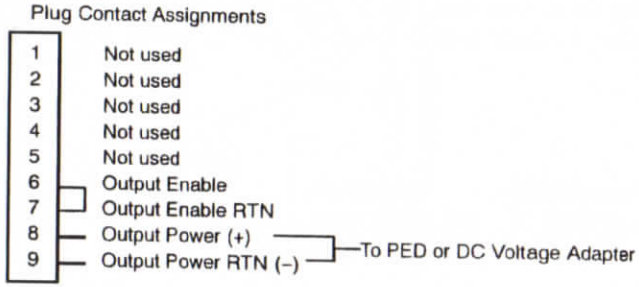

Figure 3. Mating Plug Wiring

Power is supplied to the 12-volt Cabin Power System from a DC to DC power converter located in the tailcone of the aircraft. The power converter receives 28 VDC power from the "CABIN LTS/PWR" circuit breaker located on the electrical switch/circuit breaker panel. By using two small signal pins located in the Cabin Power System connector, the power converter will not supply power to the Cabin Power connector when there is nothing plugged in.

Refer to 14 CFR 91.21 and Advisory Circular No. 91.21-1() "Use of Portable Electronic Devices Aboard Aircraft" for further information and requirements regarding the use of portable electronic devices in aircraft.

SECTION 2
LIMITATIONS

The following limitations must be adhered to:

1. The 12 Volt Cabin Power System is not certified for supplying power to flight-critical communications or navigation devices.
2. Use of the 12 Volt Cabin Power System is prohibited during takeoff and landing.
3. Use of the 12 Volt Cabin Power System is prohibited under IFR unless the operator of the aircraft has determined that the use of the 12 VDC power supply and the connected portable electronic device(s) will not cause interference with the navigation or communication systems of the airplane.

SECTION 3
EMERGENCY PROCEDURES

There is no change to the airplane emergency procedures when the 12 Volt Cabin Power System is installed. The system is disabled by unplugging the power or adapter cable from the 12 Volt Cabin Power System connector. In the event of an alternator failure, load shedding of nonessential auxiliary equipment may be accomplished by simply unplugging equipment from the connector.

SECTION 4
NORMAL PROCEDURES

The pilot must be familiar with the location of the 12 Volt Cabin Power System connector and with the operation of locking and release features common to the connector and power/adapter cables.

⚠ CAUTION

USE CAUTION WITH POWER/ADAPTER CABLES IN THE CABIN TO AVOID ENTANGLING OCCUPANTS OR CABIN FURNISHINGS AND TO PREVENT DAMAGE TO CABLES SUPPLYING LIVE ELECTRIC CURRENT.

1. 12 volt power shall be limited to a maximum of 10 amps. If a load in excess of this limit is applied to the Cabin Power System connector the "CABIN LTS/PWR" circuit breaker may open or the protection circuitry in the DC to DC power converter may limit the excess power by lowering the supplied voltage below 12 volts.

2. The 12 volt Cabin Power System may not be used to charge lithium batteries.

⚠ CAUTION

CHARGING OF LITHIUM BATTERIES MAY CAUSE THE LITHIUM BATTERIES TO EXPLODE.

NOTE

Take care to observe the manufacturer's power requirements prior to plugging any device into the 12 volt Cabin Power System connector.

NOTE

During passenger briefing, it must be explained that use of the PED (portable electronic device) is not permitted during takeoffs and landings.

NOTE

Disconnect the power/adapter cable from the Cabin Power System connector whenever the PED (portable electronic device) is not in use.

SECTION 5
PERFORMANCE

There is no change to the airplane performance when this equipment is installed.

Cessna
A Textron Company

Pilot's Operating Handbook and FAA Approved Airplane Flight Manual

CESSNA MODEL 172S

AIRPLANES 172S9063 AND ON

SUPPLEMENT 24

ASTROTECH MODEL TC-2 CLOCK/OAT/VOLT INDICATOR

SERIAL NO._____

REGISTRATION NO._____

This supplement must be inserted into Section 9 of the Pilot's Operating Handbook and FAA Approved Airplane Flight Manual when the Astrotech Clock/OAT/Volt Indicator is installed.

FAA APPROVAL

FAA APPROVED UNDER FAR 21 SUBPART J
The Cessna Aircraft Co.
Delegation Option Authorization DOA-10012S-CE

Executive Engineer

Date: 31 January 2002

Member of GAMA

31 January 2002

COPYRIGHT © 2002
CESSNA AIRCRAFT COMPANY
WICHITA, KANSAS, USA

172SPHUS-S24-00

SUPPLEMENT 24

ASTROTECH MODEL TC-2 CLOCK/OAT/VOLT INDICATOR

The following Log of Effective Pages provides the date of issue for original and revised pages, as well as a listing of all pages in the Supplement. Pages which are affected by the current revision will carry the date of that revision.

Revision Level	Date of Issue
0 (Original)	Jan. 31, 2002

LOG OF EFFECTIVITY PAGES

PAGE	DATE	PAGE	DATE
Title (S24-1)	Jan 31/02	S24-4	Jan 31/02
S24-2	Jan 31/02	S24-5	Jan 31/02
S24-3	Jan 31/02	S24-6	Jan 31/02

SERVICE BULLETIN CONFIGURATION LIST

The following is a list of Service Bulletins that are applicable to the operation of the airplane, and have been incorporated into this supplement. This list contains only those Service Bulletins that are currently active.

Number	Title	Airplane Serial Effectivity	Revision Incorporation	Incorporated In Airplane

SUPPLEMENT

DIGITAL CLOCK/OAT/VOLT INDICATOR

SECTION 1
GENERAL

The Astrotech Model TC-2 digital clock combines the features of a clock, outside air temperature gauge (OAT) and voltmeter in a single unit. The unit is designed for ease of operation with a four button control system. The upper button is used to control sequencing between temperature and voltage. The lower three buttons control reading and timing functions related to the digital clock. Temperature and voltage functions are displayed in the upper portion of the unit's LCD window, and clock/timing functions are displayed in the lower portion of the unit's LCD window.

The digital display features an internal light (back light) to ensure good visibility under low cabin lighting conditions and at night. The intensity of the back light is controlled by the PANEL LT rheostat.

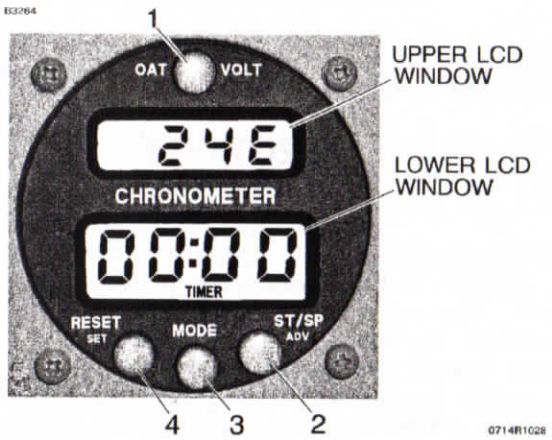

Figure 1. Astrotech Model TC-2 Clock/OAT/Volt Indicator

1. OAT/VOLT BUTTON - Volts are displayed at power up. When the button is pressed, the display switches to outside air temperature in °F. Pressing the button again selects outside air temperature in °C. Pressing the button a third time selects voltage.

2. ST/SP (ADV) BUTTON - When the ST/SP (Start/Stop) button is pressed in the Clock Mode, the date is displayed for 1.5 seconds and then the display returns to the clock. During the set function the button is used to advance the count of the digit currently being set. When in the Timer Mode, the button alternately starts and stops the elapsed counter with each push.

3. MODE BUTTON - The MODE button toggles between clock and timer. Each time the button is pressed the mode changes. While in the Timer Mode the word "TIMER" is displayed below the digits (as shown in Figure 1).

4. RESET (SET) BUTTON - When the RESET button is pressed in the Timer Mode, it resets the timer to 00:00. In the Clock Mode, the button initiates the set function for setting the date and time of day. The set function can be recognized by the Month (left two) digits flashing. If the set function is not desired the MODE button may be pressed to exit from the set operation.

SECTION 2
LIMITATIONS

There is no change to the airplane limitations when the digital clock/OAT/volt indicator is installed.

SECTION 3
EMERGENCY PROCEDURES

There is no change to the airplane emergency procedures when the clock/OAT/volt indicator is installed.

SECTION 4
NORMAL PROCEDURES

OAT/VOLTMETER OPERATION

The upper LCD window is dedicated to OAT and voltmeter operations. The voltmeter reading is preselected upon startup and is indicated by an "E" following the display reading. Pushing the OAT/VOLT button will sequence the window from voltage to Fahrenheit ("F") to Celsius ("C"), and back again to voltage.

CLOCK OPERATIONS

The lower LCD window is dedicated to clock and timing operations. Pushing the MODE button toggles between clock and timer. Each time the button is pushed the mode changes. Time of day is displayed in hours and minutes in the 24-hour format. Setting procedures are as follows:

While in the Clock Mode, press the SET (RESET) button and the left two digits will flash; these are the month digits. Press the ADV (ST/SP) button to change to the current month. Then press the SET (RESET) button and the right two digits will flash; these are the day of the month digits. Press the ADV (ST/SP) button to change to the current day. Then press the SET (RESET) button and both the month and day will be displayed.

Press the SET (RESET) button and the left two digits will flash, these are the hour digits. Press the ADV (ST/SP) button to change to the current hour. Press the SET (RESET) button and the right two digits will flash; these are the minute digits. Press the ADV (ST/SP) button to change to the current minute. Then press the SET (RESET) button and both the hour and minutes will be displayed. If the minutes were changed, the clock is stopped and holding. When the time reference being used to set the clock reaches the exact minute shown on the display, press the ST/SP button. The display will show the date and start the clock running. If the minutes were not changed, the minutes will continue to run and not need to be restarted.

When operating in the Timer Mode the word "TIMER" is shown on the display directly below the digits and indicates that the elapsed time is being displayed. The timer can be reset to 00:00, started, stopped, or restarted. It counts in minutes and seconds for the first hour and then counts in hours and minutes to 23:59. The timer continues to keep elapsed time when the display is in the clock mode. Pushing the ST/SP (ADV) button alternately starts and stops the elapsed counter with each push. The RESET (SET) button when pushed resets the timer to 00:00.

SECTION 5
PERFORMANCE

There is no change to the airplane performance when this equipment is installed.

Cessna
A Textron Company

Pilot's Operating Handbook and FAA Approved Airplane Flight Manual

CESSNA MODEL172S

AIRPLANES 172S9063 AND ON

SUPPLEMENT 25

BENDIX/KING KX 165A
VHF NAV/COMM

SERIAL NO._____

REGISTRATION NO._____

This supplement must be inserted into Section 9 of the Pilot's Operating Handbook and FAA Approved Airplane Flight Manual when the VHF NAV/COMM with Indicator Head is installed.

FAA APPROVAL

FAA APPROVED UNDER FAR 21 SUBPART J
The Cessna Aircraft Co.
Delegation Option Authorization DOA-100129-CE
Executive Engineer

Date: 31 January 2002

Member of GAMA

31 January 2002

COPYRIGHT © 2002
CESSNA AIRCRAFT COMPANY
WICHITA, KANSAS, USA

172SPHUS-S25-00

SUPPLEMENT 25

BENDIX/KING KX 165A VHF NAV/COMM

The following Log of Effective Pages provides the date of issue for original and revised pages, as well as a listing of all pages in the Supplement. Pages which are affected by the current revision will carry the date of that revision

Revision Level	Date of Issue
0 (Original)	Jan. 31, 2002

LOG OF EFFECTIVITY PAGES

PAGE	DATE	PAGE	DATE
Title (S1-1)	Jan 31/02	S1-8	Jan 31/02
S1-2	Jan 31/02	S1-9	Jan 31/02
S1-3	Jan 31/02	S1-10	Jan 31/02
S1-4	Jan 31/02	S1-11	Jan 31/02
S1-5	Jan 31/02	S1-12	Jan 31/02
S1-6	Jan 31/02	S1-13	Jan 31/02
S1-7	Jan 31/02	S1-14(blank)	Jan 31/02

SERVICE BULLETIN CONFIGURATION LIST

The following is a list of Service Bulletins that are applicable to the operation of the airplane, and have been incorporated into this supplement. This list contains only those Service Bulletins that are currently active.

Number	Title	Airplane Serial Effectivity	Revision Incorporation	Incorporated In Airplane

SUPPLEMENT

BENDIX/KING KX 165A VHF NAV/COMM

SECTION 1
GENERAL

The KX 165A VHF Nav/Comm Transceiver is very similar to the KX 155A VHF Nav/Comm Transceiver except, the KX 165A has a built in VOR/LOC converter, enabling it to directly drive a horizontal situation indicator (HSI). The KX 165A will only be installed with an HSI. For detailed information of the HSI refer to the HSI supplement in this section of the POH (refer to Section 9 index).

The KX 165A includes a 760-channel VHF communications receiver-transmitter, a 200-channel VHF navigation receiver, and a 40 channel glideslope receiver. The communications receiver-transmitter receives and transmits signals between 118.00 and 136.975 MHz with 25-kHz spacing. The navigation receiver receives VOR and localizer signals between 108.00 and 117.95 MHz in 50-kHz steps. The glideslope receiver is automatically tuned when a localizer frequency is selected. The circuits required to interpret the VOR and localizer signals are also an integral part of the Nav receiver.

Large self-dimming gas discharge readouts display both the communications and navigation operating frequencies. The KX 165A's "flip-flop" preselect feature enables you to store one frequency in the standby display while operating on another and then interchange them instantly with the touch of a button. Both the active (COMM) and the standby (STBY) frequencies may be displayed at all times and are stored in nonvolatile memory without drain on the aircraft battery. The KX 165A has 32 programmable comm channels, a stuck microphone alert and transmitter shutdown, Bearing To/From radial mode, course deviation indicator mode and an elapsed timer mode.

The Comm portion incorporates an automatic squelch. To override the automatic squelch, the Comm volume control knob is pulled out. Push the knob back in to reactivate the automatic squelch. A "T" will be displayed during transmit and "R" during valid signal reception.

The Nav portion uses the pull out feature of the Nav volume control to receive the Nav signal Ident. Pull the volume control knob out to hear the Ident signal plus voice. Push the knob in to attenuate the Ident signal and still hear Nav voice.

All controls for the Nav/Comm, except those for navigation course selection, are mounted on the front panel of the receiver-transmitter. Control lighting is provided by NAV/COMM interior lighting and the instrument panel flood lighting system. For detailed information of the audio selector panel used in conjunction with this radio refer to the audio selector panel supplement in this section of the POH (refer to Section 9 index).

NOTE

The unit has a stuck microphone alert feature. If the microphone is keyed continuously for greater than 33 seconds, the transmitter stops transmitting and the active Comm frequency flashes to alert the pilot of the stuck mic condition.

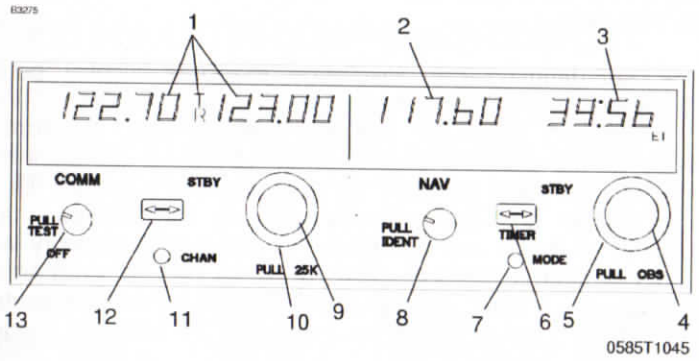

KX 165A VHF NAV/COMM

Figure 1. Bendix/King KX165A VHF NAV/COMM (Sheet 1 of 2)

NAV FUNCTION DISPLAYS

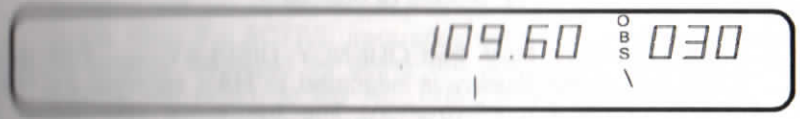

VOR MODE: ACTIVE/BEARING, CDI FORMAT

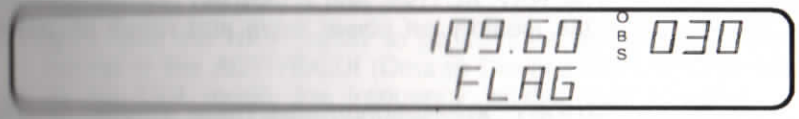

VOR MODE: ACTIVE/BEARING, FLAG DISPLAY

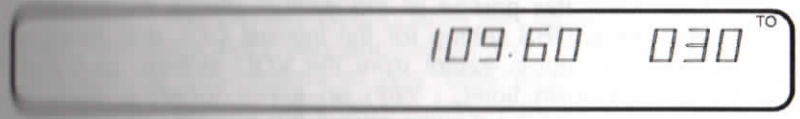

VORE MODE: ACTIVE "BEARING TO" FUNCTION DISPLAY

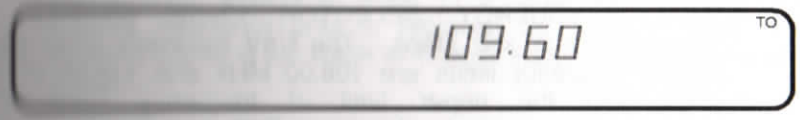

VOR MODE: ACTIVE/BEARING, FLAG DISPLAY

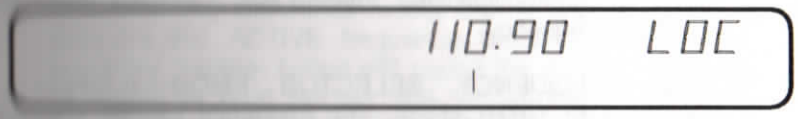

LOCALIZER MODE: FREQUENCY/CDI FORMAT

0585T1053

Figure 1. Bendix/King KX 165A VHF NAV/COMM (Sheet 2 of 2)

1. OPERATING COMM FREQUENCY DISPLAY -- Displays COMM ACTIVE and COMM STANDBY frequencies with a "T" between them to indicate TRANSMIT and an "R" to indicate RECEIVE modes of operation.

2. OPERATING NAV FREQUENCY DISPLAY -- The right portion of the display is allocated to NAV receiver ACTIVE and STANDBY information. The frequency channeling is similar to the COMM when operating in the frequency mode. The NAV ACTIVE and STANDBY frequencies are stored in the memory on power down and return on power up.

3. NAV STANDBY/OBS/Bearing/Radial/Timer Display -- The right side of the NAV display is controlled by the MODE SELECTOR BUTTON (see #7 below). With an active VOR frequency, this portion of the display shows the STANDBY frequency, OBS setting for the internal CDI, the bearing to the VOR station, radial from the VOR station, or a count-up/count-down timer. With an active localizer frequency, this portion of the display shows the standby frequency, the letters "LOC", or count-up/count-down timer.

4. NAV FREQUENCY SELECTOR KNOB (SMALL) -- Operates in 50-kHz steps. The NAV receiver's lower and upper frequency limits are 108.00 MHz and 117.95 MHz. Exceeding the upper limit of frequency band will automatically return to the lower limit and vice versa. A clockwise rotation will increase (inc) the previous frequency while a counterclockwise rotation will decrease (dec) the previous frequency.

5. NAV FREQUENCY SELECTOR KNOB (LARGE) -- Operates in 1-MHz steps. The frequency inc/dec operates the STANDBY frequency display. A clockwise rotation will increase the previous frequency while a counterclockwise rotation will decrease the previous frequency. Exceeding the upper limit of the frequency band will automatically return to the lower limit and vice versa.

6. NAV/FREQUENCY TRANSFER BUTTON (⟷) -- Interchanges the NAV ACTIVE and STANDBY frequencies. Depressing the NAV frequency transfer button for 2 seconds or more will cause the display to go into the ACTIVE ENTRY mode. Only the ACTIVE frequency will be displayed and it can be directly changed by using the NAV inc/dec knobs. The display will return to the ACTIVE/STANDBY mode when the NAV frequency transfer button is pushed.

7. MODE SELECTOR BUTTON -- Depressing the mode button will cause the NAV display to go from the ACTIVE/STANDBY format to the ACTIVE/CDI (Course Deviation Indicator) format. In the CDI mode, the frequency inc/dec knob (pushed in) channels the ACTIVE frequency. When the ACTIVE window is tuned to a VOR frequency, the standby frequency area is replaced by a three digit OBS (Omni Bearing Selector) display. The desired OBS course can be selected by pulling out the inner NAV frequency knob and turning it. This OBS display is independent of any OBS course selected on an external CDI. An "OBS" in the middle of the NAV display will flash while the inner NAV frequency knob is pulled out. The CDI is displayed on the line below the frequency/OBS. When the ACTIVE window is tuned to a localizer frequency, the standby frequency area is replaced by "LOC". When the received signal is too weak to ensure accuracy the display will "FLAG".

   Depressing the mode button again will cause the NAV display to go from the ACTIVE/CDI format to the ACTIVE/BEARING format. In the BEARING mode, the frequency inc/dec knob channels the ACTIVE frequency window. Depressing the frequency transfer button will cause the ACTIVE frequency to be placed in blind storage and the STANDBY frequency (in blind storage) to be displayed in the ACTIVE window display. In bearing mode, the right hand window of the NAV display shows the bearing TO the station. When a too weak or invalid VOR signal is received the display flags (dashes).

Another push of the mode button will cause the NAV display to go from the ACTIVE/BEARING format to the ACTIVE/RADIAL format. In the RADIAL mode, the frequency inc/dec knobs channel the ACTIVE frequency window and depressing the frequency transfer button will cause the ACTIVE frequency to be placed in blind storage and the STANDBY frequency (in blind storage) to be displayed in the ACTIVE window display. In radial mode of operation, the right hand window of NAV display shows the radial FROM the station. When a too weak or invalid VOR signal is received the display flags (dashes).

Another push of the mode button will cause the unit to go into the TIMER mode. When the unit is turned on, the elapsed timer (ET) begins counting upwards from zero. The timer can be stopped and reset to zero by pushing the NAV frequency transfer button for 2 seconds or more causing the ET on the display to flash. In this state, the timer can be set as a countdown timer or the elapsed timer can be restarted. The countdown timer is set by using the NAV frequency inc/dec knobs to set the desired time and then pushing the NAV frequency transfer button to start the timer. The large knob selects minutes, the small knob in the "in" position selects 10 second intervals, and the small knob in the "out" position selects individual seconds. After the countdown timer reaches zero, the counter will begin to count upwards indefinitely while flashing for the first 15 seconds. When the elapsed timer is reset to zero it may be restarted again by momentarily pushing the NAV frequency transfer button.

8. NAV/VOLUME CONTROL (PULL IDENT) -- Adjusts volume of navigation receiver audio. When the knob is pulled out, the Ident signal plus voice may be heard. The volume of voice/ident can be adjusted by turning this knob.

9. COMM FREQUENCY SELECTOR KNOB (INNER) -- This smaller knob is designed to change the indicated frequency in steps of 50-kHz when it is pushed in, and in 25-kHz steps when it is pulled out.

10. COMM FREQUENCY SELECTOR KNOB (OUTER) -- The outer, larger selector knob is used to change the MHz portion of the frequency display. At either band-edge of the 118-136 MHz frequency spectrum, an offscale rotation will wrap the display around to the other frequency band-edge (i.e., 136 MHz advances to 118 MHz).

11. CHANNEL BUTTON -- Pressing the CHAN button for 2 or more seconds will cause the unit to enter the channel program (PG) mode. Upon entering the channel program mode, the channel number will flash indicating that it can be programmed. The desired channel can be selected by turning the comm kHz knob. The channel frequency can be entered by pushing the COMM TRANSFER button which will cause the standby frequency to flash. The comm frequency knobs are then used to enter the desired frequency. If dashes (located between 136 MHz and 118 MHz) are entered instead of a frequency, the corresponding channel is skipped in channel selection mode. Additional channels may be programmed by pressing the COMM TRANSFER button and using the same procedure. The channel information is saved by pushing the CHAN button which will also cause the unit to return to the previous frequency entry mode.

The channel selection mode (CH) can then be entered by momentarily pushing the CHAN button. The comm frequency knobs can be used to select the desired channel. The unit will automatically default to the previous mode if no channel is selected within 2 seconds after entering the channel selection mode. The unit is placed in the transmit mode by depressing a mic button.

12. COMM FREQUENCY TRANSFER BUTTON (⟷) -- Interchanges the frequencies in the USE and STANDBY displays. To tune the radio to the desired operating frequency, the desired frequency must be entered into the standby display and then the COMM TRANSFER button must be pushed. This will trade the contents of the active and standby displays. The operating frequency can also be entered by accessing the ACTIVE ENTRY (direct tune) mode which is done by pushing the COMM TRANSFER button for 2 or more seconds. In the direct tune mode, only the active part of the display is visible. The desired frequency can be directly entered into the display. Push the COMM TRANSFER button again to return to the active/standby display.

    The transceiver is always tuned to the frequency appearing in the ACTIVE display. It is, therefore, possible to have two different frequencies stored in the ACTIVE and STANDBY displays and to change back and forth between them at the simple push of the COMM TRANSFER button.

13. COMM VOLUME CONTROL (OFF/PULL/TEST) -- Rotate the VOL knob clockwise from the OFF position. Pull the VOL knob out and adjust for desired listening level. Push the VOL knob back in to actuate the automatic squelch. The VOL knob may also be pulled out to hear particularly weak signals.

SECTION 2
LIMITATIONS

There is no change to the airplane limitations when this avionic equipment is installed.

SECTION 3
EMERGENCY PROCEDURES

There is no change to the airplane emergency procedures when this avionic equipment is installed. However, if the frequency transfer buttons fail, the radio will remain operational on the last frequency selected. If either frequency transfer button is pressed and held while power is applied to the unit, the unit wakes up with 120.00 MHz in the COMM use frequency and 110.00 MHz in the NAV active frequency, with both COMM and NAV in the active entry mode. This will aid the pilot in blind tuning the radio.

SECTION 4
NORMAL PROCEDURES

COMMUNICATION RECEIVER-TRANSMITTER OPERATION:

1. OFF/PULL/TEST Volume Control -- Turn clockwise; pull out and adjust to desired audio level; push control back in to activate the automatic squelch.
2. MIC Selector Switch (on audio control panel) -- SET to COMM 1.
3. SPEAKER Selector (on audio control panel) -- SET to desired mode.
4. COMM Frequency Selector Knobs -- Select desired operating frequency.
5. COMM TRANSFER Button -- PRESS to transfer desired frequency from the STBY display into the COMM display.
6. Mic Button:
    a. To transmit -- Press button and speak in microphone.

NOTE

During COMM transmission, a lighted "T" will appear between the "COMM" and "STBY" displays to indicate that the transceiver is operating in the transmit mode.

    b. To Receive -- RELEASE mike button.

NAVIGATION RECEIVER OPERATION:

1. NAV Frequency Selector Knobs -- SELECT desired operating frequency in "STBY" display.
2. NAV TRANSFER BUTTON -- PRESS to transfer desired frequency from the "STBY" display into the "NAV" display.
3. Speaker Selector (on audio control panel) -- SET to desired mode.
4. NAV Volume Control --
   a. ADJUST to desired audio level.
   b. PULL out to identify station.

VOR OPERATION:

Channel the NAV Receiver to the desired VOR and monitor the audio to positively identify the station. To select an OBS course, turn the OBS knob to set the desired course under the lubber line. When a signal is received, the NAV flag will pull out of view and show a "TO" or "FROM" flag as appropriate for the selected course.

LOC OPERATION:

Localizer circuitry is energized when the NAV Receiver is channeled to an ILS frequency. Monitor the LOC audio and positively identify the station. The NAV flag will be out of view when the signal is of sufficient strength to be usable.

GLIDESLOPE OPERATION:

The glideslope receiver is automatically channeled when a localizer frequency is selected. A separate warning flag is provided to indicate usable signal conditions.

PILOT CONFIGURATION:

This mode can be accessed by pressing and holding the NAV Mode Button for more than 2 seconds and then pressing the Nav Frequency Transfer Button for an additional 2 seconds, while continuing to hold the NAV Mode Button. When the Pilot Config Mode is entered, the unit will show the "SWRV" mnemonic which is the unit software revision level. Adjustment pages can be accessed by MODE button presses.

The pilot may adjust two parameters in the pilot configuration, the display minimum brightness and sidetone volume level. Minimum brightness (BRIM) will have a range of 0-255. The dimmest is 0 and the brightest is 255. Sidetone volume level is adjusted when SIDE is displayed. Values from 0-255 may be selected with 0 being least volume, 255 being the greatest.

Adjustment	Mnemonic	Min Level	Max Level
Software Revision Number	SWRV	- - -	- - -
Minimum Display Brightness	BRIM	0	255
Sidetone Level	SIDE	0	255

Subsequent presses of the MODE button sequences through SWRV, BRIM, SIDE, and then back to SWRV.

Pressing the NAV Transfer Button momentarily exits Pilot configuration mode. The NAV returns to its pre-Pilot Config state with the new brightness and sidetone levels stored in nonvolatile memory.

SECTION 5
PERFORMANCE

There is no change to the airplane performance when this system equipment is installed. However, the installation of an externally mounted antenna, or several related antennas, will result in a minor reduction in cruise performance.

Cessna
A Textron Company

Pilot's Operating Handbook and FAA Approved Airplane Flight Manual

CESSNA MODEL 172S

AIRPLANES 172S9569 AND ON

SUPPLEMENT 26
BENDIX/KING KDR 510
FLIGHT INFORMATION SERVICES (FIS)

SERIAL NO. _____

REGISTRATION NO. _____

This supplement must be inserted into Section 9 of the Pilot's Operating Handbook and FAA Approved Airplane Flight Manual when the airplane is equipped with the Bendix/King KDR 510 Flight Information Services (FIS).

APPROVED BY
FAA APPROVED UNDER FAR 21 SUBPART J
The Cessna Aircraft Co.
Delegation Option Authorization DOA-100129-CE

Executive Engineer

DATE OF APPROVAL _____

7 JANUARY 2004

SUPPLEMENT 26

BENDIX/KING KDR 510
FLIGHT INFORMATION SERVICES (FIS)

Use the Log of Effective Pages to determine the current status of this supplement. Pages affected by the current revision are indicated by an asterisk (*) preceding the page number.

Supplement Status	Date
Original	7 January 2004

LOG OF EFFECTIVE PAGES

Page Number	Page Status	Revision Number
S26-1 thru S26-3/S26-4	Original	0
S26-5 thru S26-6	Original	0

SUPPLEMENT 26

BENDIX/KING KDR 510
FLIGHT INFORMATION SERVICES (FIS)

SERVICE BULLETIN CONFIGURATION LIST

The following is a list of Service Bulletins that are applicable to the operation of the airplane, and have been incorporated into this supplement. This list contains only those Service Bulletins that are currently active.

Number	Title	Airplane Serial Effectivity	Revision Incorporation	Incorporated In Airplane

SUPPLEMENT

BENDIX/KING KDR 510
FLIGHT INFORMATION SERVICES (FIS)

SECTION 1
GENERAL

The Bendix/King KDR 510 Flight Information Services (FIS) [illegible] provides weather information and other flight advisory [illegible] to pilots to enhance situational awareness. The services [illegible] a network of ground based VHF transmitters that [illegible] broadcast data to any aircraft within line-of-sight of the [illegible]. The aircraft must be equipped with a dedicated VHF [illegible] and receiver for FIS. Data is then presented to the pilot [illegible] the KMD 550 multi-function display. FIS information is [illegible] to be used as a strategic planning tool to help the pilot [illegible] inclement weather areas that are beyond his visual range. FIS lacks the sufficient resolution and update rate necessary for [illegible] weather penetration.

NOTE

Cessna Aircraft Company does not guarantee the quality, accuracy, or availability of FIS data. Some data is available to all KDR 510 installations while other data is available only by subscription. The network of transmitters may not cover the entire area where the aircraft is operated, and the aircraft may need to be above 5000 feet AGL to receive FIS data in areas where coverage does exist.

SECTION 2
LIMITATIONS

Use of the Bendix/King KDR 510 Flight Information Services (FIS) for severe weather penetration is prohibited.

SECTION 3

EMERGENCY PROCEDURES

No additional emergency procedures are required when the KDR 510 Flight Information Services (FIS) equipment is installed in the airplane.

SECTION 4

NORMAL PROCEDURES

Press the WX function select key of the KMD 550 multi-function display to toggle through weather related systems installed on the aircraft that display on the KMD 550. The MODE button toggles between different weather related information displays such as switching between METARs and PIREPs. It is highly recommended that the pilot read the Bendix/King subscription agreement and the FIS addendum to the KMD 550/850 Pilot's Guide to understand the entire range of information available. It is possible that data availability and subscription services may change over time.

SECTION 5

PERFORMANCE

Airplane performance does not change when the KDR 510 Flight Information Services (FIS) equipment is installed.

CONTENTS

SUPPLEMENT

INTRODUCTION

FLIGHT CONSIDERATIONS

Physiological 1
Checklists 2
Aircraft Loading 3
Single Engine Flight Information (Multi-engine Airplanes) 4
Pilot Proficiency 5
Fuel Management 6
Airframe Icing 7
Weather 8

SYSTEM OPERATIONAL CONSIDERATIONS

Restraint Systems 9
Fuel System Contamination 10
Fuel Pump Operation 11
Auxiliary Fuel Tanks 12
Instrument Power 13
Alternate Air System 14
Carbon Monoxide 15
Turbocharger 16
In-Flight Fires 17
In-Flight Opening of Doors 18

MAINTENANCE CONSIDERATIONS

Maintenance 19
Seat and Restraint Systems 20
Exhaust and Fuel Systems 21
Retractable Landing Gear 22
Pressurized Airplanes 23
Potential Hazards 24

INTRODUCTION

Pilots should know the information contained in the airplane's operating handbook, placards and checklists, and be familiar with service/maintenance publications, including service letters and bulletins, to ensure maximum safe utilization of the airplane. When the airplane was manufactured, it was equipped with a Pilot's Operating Handbook, Flight Manual, and/or Owner's Manual. If a handbook or manual is missing, a replacement should be obtained by contacting a Cessna Authorized Service Station.

In an effort to re-emphasize subjects that are generally known to most pilots, safety and operational information has been provided in the following Pilot Safety and Warning Supplements. As outlined in the table of contents, the Supplements are arranged numerically to make it easier to locate a particular Supplement. Supplement coverage is classified in three (3) categories: Flight Considerations, System Operational Considerations, and Maintenance Considerations. Most of the information relates to all Cessna airplanes, although a few Supplements are directed at operation of specific configurations such as multi-engine airplanes, pressurized airplanes, or airplanes certified for flight into known icing conditions.

Day-to-day safety practices play a key role in achieving maximum utilization of any piece of equipment.

WARNING

IT IS THE RESPONSIBILITY OF THE PILOT TO ENSURE THAT ALL ASPECTS OF PREFLIGHT PREPARATION ARE CONSIDERED BEFORE A FLIGHT IS INITIATED. ITEMS WHICH MUST BE CONSIDERED INCLUDE, BUT ARE NOT NECESSARILY LIMITED TO, THE FOLLOWING:

- **PILOT PHYSICAL CONDITION AND PROFICIENCY**
- **AIRPLANE AIRWORTHINESS**
- **AIRPLANE EQUIPMENT APPROPRIATE FOR THE FLIGHT**
- **AIRPLANE LOADING AND WEIGHT AND BALANCE**
- **ROUTE OF THE FLIGHT**
- **WEATHER DURING THE FLIGHT**
- **FUEL QUANTITY REQUIRED FOR THE FLIGHT, INCLUDING ADEQUATE RESERVES**
- **AIR TRAFFIC CONTROL AND ENROUTE NAVIGATION FACILITIES**
- **FACILITIES AT AIRPORTS OF INTENDED USE**

(Continued Next Page)

WARNING (Continued)

- **ADEQUACY OF AIRPORT (RUNWAY LENGTH, SLOPE, CONDITION, ETC.)**
- **LOCAL NOTICES, AND PUBLISHED NOTAMS**

FAILURE TO CONSIDER THESE ITEMS COULD RESULT IN AN ACCIDENT CAUSING EXTENSIVE PROPERTY DAMAGE AND SERIOUS OR EVEN FATAL INJURIES TO THE PILOT, PASSENGERS, AND OTHER PEOPLE ON THE GROUND.

The following Pilot Safety and Warning Supplements discuss in detail many of the subjects which must be considered by a pilot before embarking on any flight. Knowledge of this information is considered essential for safe, efficient operation of an airplane.

Proper flight safety begins long before the takeoff. A pilot's attitude toward safety and safe operation determines the thoroughness of the preflight preparation, including the assessment of the weather and airplane conditions and limitations. The pilot's physical and mental condition and proficiency are also major contributing factors. The use of current navigation charts, the Aeronautical Information Manual, NOTAMs, airport data, weather information, Advisory Circulars and training information, etc., is important. Individuals often develop their own personal methods for performing certain flight operations; however, it is required that these do not conflict with the limitations or recommended operating procedures for a specific airplane.

The pilot should know the Emergency Procedures for the airplane, since there may not be time to review the checklist in an emergency situation. It is essential that the pilot review the entire operating handbook to retain familiarity. He or she should maintain a working knowledge of the limitations of his or her airplane. When the pilot deliberately or inadvertently operates the airplane outside the limitations, he or she is violating Federal Aviation Regulations and may be subject to disciplinary actions.

Cessna does not support modifications to Cessna airplanes, whether by Supplemental Type Certificate or otherwise, unless these certificates are approved by Cessna. Such modifications, although approved by the FAA, may void any and all Cessna warranties on the airplane since Cessna may not know the full effects on the overall airplane. Cessna does not and has not tested and approved all such modifications by other companies. Maintenance and operating procedures and performance data provided by Cessna may no longer be accurate for the modified airplane.

Airplanes require maintenance on a regular basis. As a result, it is essential that the airplane be regularly inspected and repaired when parts are worn or damaged in order to maintain flight safety. Information for the proper maintenance of the airplane is found in the airplane Service/Maintenance Manual, Illustrated Parts Catalog, and in company-issued Service Information

Letters or Service Bulletins, etc. Pilots should assure themselves that all recommendations for product changes or modifications called for by Service Bulletins, etc., are accomplished and that the airplane receives repetitive and required inspections.

Much of the subject matter discussed in the following Supplements has been derived from various publications of the U.S. Government. Since these documents contain considerably more information and detail than is contained here, it is highly recommended that the pilot also read them in order to gain an even greater understanding of the subjects related to flight safety. These publications include the following:

AERONAUTICAL INFORMATION MANUAL (AIM). This Federal Aviation Administration (FAA) manual is designed to provide airmen with basic flight information and Air Traffic Control (ATC) procedures for use in the National Airspace System (NAS). It also contains items of interest to pilots concerning health and medical facts, factors affecting flight safety, a pilot/controller glossary of terms used in the Air Traffic Control System, and information on safety, accident and hazard reporting. This manual can be purchased at retail dealers, or on a subscription basis from the Superintendent of Documents, U.S. Government Printing Office, Washington, D.C. 20402.

NOTICES TO AIRMEN (Class II). This is a publication containing current Notices to Airmen (NOTAMS) which are considered essential to the safety of flight as well as supplemental data affecting the other operational publications listed here. It also includes current Flight Data Center (FDC) NOTAMS, which are regulatory in nature, issued to establish restrictions to flight or amend charts or published Instrument Approach Procedures. This publication is issued every 14 days and is available by subscription from the Superintendent of Documents.

AIRPORT FACILITY DIRECTORY, ALASKA and PACIFIC CHART SUPPLEMENTS. These publications contain information on airports, communications, navigation aids, instrument landing systems, VOR receiver checks, preferred routes, FSS/Weather Service telephone numbers, Air Route Traffic Control Center (ARTCC) frequencies, and various other pertinent special notices essential to air navigation. These publications are available by subscription from the National Ocean Service (NOS), NOAA N/ACC3 Distribution Division, Riverdale, Maryland 20737, telephone 1-800-638-8972 FAX (301) 436-6829.

FEDERAL AVIATION REGULATIONS (FARs). The FAA publishes the FARs to make readily available to the aviation community the regulatory requirements placed upon them. These regulations are sold as individual parts by the Superintendent of Documents. The more frequently amended parts are sold by subscription service with subscribers receiving changes automatically as they are issued. Less active parts are sold on a single-sale basis. Changes to single-sale parts will be sold separately as issued. Information concerning

these changes will be furnished by the FAA through its Status of Federal Aviation Regulations, AC 00-44ll.

ADVISORY CIRCULARS (ACs). The FAA issues ACs to inform the aviation public of nonregulatory material of interest. Advisory Circulars are issued in a numbered subject system corresponding to the subject areas of the Federal Aviation Regulations. AC 00-2.11, Advisory Circular Checklist contains a listing of ACs covering a wide range of subjects and how to order them, many of which are distributed free-of-charge.

AC 00-2.11 is issued every four months and is available at no cost from: U.S. Department of Transportation, Distribution requirements Section, SVC 121.21, Washington, DC 20590. The checklist is also available via the internet at http://www.faa.gov/abc/ac-chklist/actoc.htm.

PHYSIOLOGICAL

FATIGUE

Fatigue continues to be one of the most treacherous hazards to flight safety. It generally slows reaction times and causes errors due to inattention, and it may not be apparent to a pilot until serious errors are made. Fatigue is best described as either acute (short-term) or chronic (long-term). As a normal occurrence of everyday living, acute fatigue is the tiredness felt after long periods of physical and/or mental strain, including strenuous muscular effort, immobility, heavy mental workload, strong emotional pressure, monotony, and lack of sleep. In addition to these common causes, the pressures of business, financial worries, and unique family problems can be important contributing factors. Consequently, coordination and alertness, which are vital to safe pilot performance, can be reduced. Acute fatigue can be prevented by adequate rest and sleep, as well as regular exercise and proper nutrition.

Chronic fatigue occurs when there is insufficient time for full recovery between periods of acute fatigue. Performance continues to degrade and judgment becomes impaired so that unwarranted risks may be taken. Recovery from chronic fatigue requires a prolonged period of rest. If a pilot is markedly fatigued prior to a given flight, he or she should not fly. To prevent cumulative fatigue effects during long flights, pilots should conscientiously make efforts to remain mentally active by making frequent visual and radio navigation position checks, estimates of time of arrival at the next check point, etc.

STRESS

Stress from the pressures of everyday living can impair pilot performance, often in very subtle ways. Difficulties can occupy thought processes enough to markedly decrease alertness. Distractions can also interfere with judgment to the point that unwarranted risks are taken, such as flying into deteriorating weather conditions to keep on schedule. Stress and fatigue can be an extremely hazardous combination.

It is virtually impossible to leave stress on the ground. Therefore, when more than usual difficulties are being experienced, a pilot should consider delaying flight until these difficulties are satisfactorily resolved.

EMOTION

Certain emotionally upsetting events, including a serious argument, death of a family member, separation or divorce, loss of job, or financial catastrophe can seriously impair a pilot's ability to fly an airplane safely. The emotions of anger, depression, and anxiety from such events not only decrease alertness

but may also lead to taking unnecessary risks. Any pilot who experiences an emotionally upsetting event should not fly until satisfactorily recovered from the event.

ILLNESS

A pilot should not fly with a known medical condition or a change of a known medical condition that would make the pilot unable to meet medical certificate standards. Even a minor illness suffered in day-to-day living can seriously degrade performance of many piloting skills vital to safe flight. An illness may produce a fever and other distracting symptoms that can impair judgment, memory, alertness, and the ability to make decisions. Even if the symptoms of an illness are under adequate control with a medication, the medication may adversely affect pilot performance, and invalidate his or her medical certificate.

The safest approach is not to fly while suffering from any illness. If there is doubt about a particular illness, the pilot should contact an Aviation Medical Examiner for advice.

MEDICATION

Pilot performance can be seriously degraded by both prescribed and over-the-counter medications. Many medications, such as tranquilizers, sedatives, strong pain relievers, and cough suppressant preparations, have primary effects that may impair judgment, memory, alertness, coordination, vision, and ability to make decisions. Other medications, such as antihistamines, blood pressure drugs, muscle relaxants, and agents to control diarrhea and motion sickness, have side effects that may impair the body's critical functions. Any medications that depress the nervous system, such as a sedative, tranquilizer or antihistamine, can make a pilot more susceptible to hypoxia.

FARs prohibit pilots from flying while using any medication that affects their faculties in any way contrary to safety. The safest advice is to not fly while taking medications, unless approved to do so by an Aviation Medical Examiner. The condition for which the drug is required may itself be very hazardous to flying, even when the symptoms are suppressed by the drug. A combination of medications may cause adverse effects that do not result from a single medication.

ALCOHOL

Do not fly while under the influence of alcohol. Flying and alcohol are definitely a lethal combination. FARs prohibit pilots from flying within 8 hours after consuming any alcoholic beverage or while under the influence of alcohol. A

pilot may still be under the influence 8 hours after drinking a moderate amount of alcohol. Therefore, an excellent practice is to allow at least 24 hours between "bottle and throttle," depending on the amount of alcoholic beverage consumed.

Extensive research has provided a number of facts about the hazards of alcohol consumption and flying. As little as one ounce of liquor, one bottle of beer, or four ounces of wine can impair flying skills, with the alcohol consumed in these drinks being detectable in the breath and blood for at least three hours. Alcohol also renders a pilot much more susceptible to disorientation and hypoxia. In addition, the after effects of alcohol increase the level of fatigue significantly.

There is simply no way of alleviating a hangover. Remember that the human body metabolizes alcohol at a fixed rate, and no amount of coffee or medications will alter this rate. Do not fly with a hangover, or a "masked hangover" (symptoms suppressed by aspirin or other medication). A pilot can be severely impaired for many hours by hangover.

DRINKING THE RIGHT FLUIDS

One of the main sources of pilot and passenger complaints stems from the relatively lowered humidity during air travel encountered at altitude particularly on extended flights. Even though an individual may not be physically active, body water is continuously expired from the lungs and through the skin. This physiological phenomenon is called insensible perspiration or insensible loss of water.

The loss of water through the skin, lungs, and kidneys never ceases. Water loss is increased with exercise, fever, and in some disease conditions such as hyperthyroidism. Combatting the effects of insensible water loss during flight requires frequent water intake. Unless this is done, dehydration will occur and this causes interference with blood circulation, tissue metabolism, and excretion of the kidneys. Water is vital for the normal chemical reaction of human tissue. It is also necessary for the regulation of body temperature and as an excretory medium.

Beginning a flight in a rested, healthy condition is of prime importance. Proper water balance through frequent fluid intake relieves the adverse effects produced by insensible water loss in an atmosphere of lowered humidity. Typical dehydration conditions are: dryness of the tissues and resulting irritation of the eyes, nose, and throat as well as other conditions previously mentioned plus the associated fatigue relating to the state of acidosis (reduced alkalinity of the blood and the body tissues). A person reporting for a flight in a dehydrated state will more readily notice these symptoms until fluids are adequately replaced.

Consumption of coffee, tea, cola, and cocoa should be minimized since these drinks contain caffeine. In addition, tea contains a related drug, theophylline, while cocoa (and chocolate) contain theobromine, of the same drug group. These drugs, besides having a diuretic effect, have a marked stimulating effect and can cause an increase in pulse rate, elevation of blood pressure, stimulation of digestive fluid formation, and irritability of the gastrointestinal tract.

HYPOXIA

Hypoxia, in simple terms, is a lack of sufficient oxygen to keep the brain and other body tissues functioning properly. Wide individual variation occurs with respect to susceptibility to and symptoms of hypoxia. In addition to progressively insufficient oxygen at higher altitudes, anything interfering with the blood's ability to carry oxygen can contribute to hypoxia (e.g., anemias, carbon monoxide, and certain drugs). Also, alcohol and various other drugs decrease the brain's tolerance to hypoxia. A human body has no built-in alarm system to let the pilot know when he is not getting enough oxygen. It is difficult to predict when or where hypoxia will occur during a given flight, or how it will manifest itself.

Although a deterioration in night vision occurs at a cabin pressure altitude as low as 5000 feet, other significant effects of altitude hypoxia usually do not occur in a normal healthy pilot below 12,000 feet. From 12,000 to 15,000 feet of altitude, judgment, memory, alertness, coordination, and ability to make decisions are impaired, and headache, drowsiness, dizziness, and either a sense of well-being (euphoria) or belligerence occurs. The effects appear following increasingly shorter periods of exposure to increasing altitude. In fact, a pilot's performance can seriously deteriorate within 15 minutes at 15,000 feet. At cabin pressures above 15,000 feet, the periphery of the visual field grays out to a point where only central vision remains (tunnel vision). A blue coloration (cyanosis) of the fingernails and lips develops and the ability to take corrective and protective action is lost in 20 to 30 minutes at 18,000 feet and 5 to 12 minutes at 20,000 feet, followed soon thereafter by unconsciousness.

The altitude at which significant effects of hypoxia occur can be lowered by a number of factors. Carbon monoxide inhaled in smoking or from exhaust fumes, lowered hemoglobin (anemia), and certain medications can reduce the oxygen-carrying capacity of the blood to the degree that the amount of oxygen provided to body tissues will already be equivalent to the oxygen provided to the tissues when exposed to a cabin pressure altitude of several thousand feet. Small amounts of alcohol and low doses of certain drugs, such as antihistamines, tranquilizers, sedatives, and analgesics can, through their depressant action, render the brain much more susceptible to hypoxia. Extreme heat and cold, fever, and anxiety increase the body's demand for oxygen, and hence, its susceptibility to hypoxia.

Current regulations require that pilots use supplemental oxygen after 30 minutes of exposure to cabin pressure altitudes between 12,500 and 14,000 feet and immediately upon exposure to cabin pressure altitudes above 14,000 feet. Every occupant of the airplane must be provided with supplemental oxygen at cabin pressure altitudes above 15,000 feet.

Hypoxia can be prevented by avoiding factors that reduce tolerance to altitude, by enrichening the air with oxygen from an appropriate oxygen system, and by maintaining a comfortable, safe cabin pressure altitude. For optimum protection, pilots are encouraged to use supplemental oxygen above 10,000 feet during the day, and above 5000 feet at night.

NOTE

When using oxygen systems that do not supply "pressure breathing", 100% oxygen cannot maintain proper blood oxygen level above 25,000 feet altitude. Pilot's must be familiar with limitations of the airplane oxygen system.

Pilots are encouraged to attend physiological training and susceptibility testing in a high-altitude chamber to experience and make note of their own personal reactions to the effects of hypoxia. These chambers are located at the FAA Civil Aeromedical Institute and many governmental and military facilities. Knowing before hand what your own early symptoms of hypoxia are will allow a greater time margin for taking corrective action. The corrective action, should symptoms be noticed, is to use supplemental oxygen and/or decrease cabin altitude. These actions must not be delayed.

SMOKING

Smokers are slightly resistant to the initial symptoms of hypoxia. Because of this, smokers risk the possibility of delayed detection of hypoxia. Pilots should avoid any detrimental factors, such as second hand smoke, which can cause such insensitivity. The small merit of hypoxic tolerance in smokers will do more harm than good by rendering them insensitive and unaware of the hypoxic symptoms.

Smoking in the cabin of the airplane exposes other passengers to high concentrations of noxious gas and residue. Furthermore, many of the systems of the airplane are contaminated and deteriorated by long-term exposure to smoking residue. Due to the large number of known dangers and hazards, as well as those which are still the subject of research, it is strongly recommended that smoking not take place in flight.

WARNING

SMOKING WHILE OXYGEN SYSTEMS ARE IN USE CREATES AN EXTREME FIRE HAZARD.

HYPERVENTILATION

Hyperventilation, or an abnormal increase in the volume of air breathed in and out of the lungs, can occur subconsciously when a stressful situation is encountered in flight. As hyperventilation expels excessive carbon dioxide from the body, a pilot can experience symptoms of light headedness, suffocation, drowsiness, tingling in the extremities, and coolness -- and react to them with even greater hyperventilation. Incapacitation can eventually result. Uncoordination, disorientation, painful muscle spasms, and finally, unconsciousness may ultimately occur.

The symptoms of hyperventilation will subside within a few minutes if the rate and depth of breathing are consciously brought back under control. The restoration of normal carbon dioxide levels in the body can be hastened by controlled breathing in and out of a paper bag held over the nose and mouth.

Early symptoms of hyperventilation and hypoxia are similar. Moreover, hyperventilation and hypoxia can occur at the same time. Therefore, if a pilot is using oxygen when symptoms are experienced, the oxygen system should be checked to assure that it has been functioning effectively before giving attention to rate and depth of breathing.

EAR BLOCK

As an airplane climbs and the cabin pressure decreases, trapped air in the middle ear expands and escapes through the eustachian tube to the nasal passages, thus equalizing with the pressure in the cabin. During descent, cabin pressure increases and some air must return to the middle ear through the eustachian tube to maintain equal pressure. However, this process does not always occur without effort. In most cases it can be accomplished by swallowing, yawning, tensing the muscles in the throat or, if these do not work, by the combination of closing the mouth, pinching the nose closed, and attempting to blow gently through the nostrils (Valsalva maneuver).

Either an upper respiratory infection, such as a cold or sore throat, or a nasal allergic condition can produce enough congestion around the eustachian tube to make equalization difficult. Consequently, the difference in pressure between the middle ear and the airplane cabin can build up to a level that will hold the eustachian tube closed, making equalization difficult, if not impossible. This situation is commonly referred to as an “ear block.” An ear block produces severe pain and loss of hearing that can last from several hours to several days. Rupture of the ear drum can occur in flight or after landing. Fluid can accumulate in the middle ear and become infected. If an ear block is experienced and does not clear shortly after landing, a physician should be consulted. Decongestant sprays or drops to reduce congestion usually do not provide adequate protection around the eustachian tubes. Oral decongestants have side effects that can significantly impair pilot performance. An ear block can be prevented by not flying with an upper respiratory infection or nasal allergic condition.

SINUS BLOCK

During climb and descent, air pressure in the sinuses equalizes with the airplane cabin pressure through small openings that connect the sinuses to the nasal passages. Either an upper respiratory infection, such as a cold or sinusitis, or a nasal allergic condition can produce enough congestion around the openings to slow equalization, and as the difference in pressure between the sinus and cabin increases, eventually the openings plug. This “sinus block” occurs most frequently during descent.

A sinus block can occur in the frontal sinuses, located above each eyebrow, or in the maxillary sinuses, located in each upper cheek. It will usually produce excruciating pain over the sinus area. A maxillary sinus block can also make the upper teeth ache. Bloody mucus may discharge from nasal passages. A sinus block can be prevented by not flying with an upper respiratory infection or nasal allergic condition. If a sinus block does occur and does not clear shortly after landing, a physician should be consulted.

VISION IN FLIGHT

Of all the pilot's senses, vision is the most critical to safe flight. The level of illumination is the major factor to adequate in-flight vision. Details on flight instruments or aeronautical charts become difficult to discern under dimly lit conditions. Likewise, the detection of other aircraft is much more difficult under such conditions.

In darkness, vision becomes more sensitive to light, a process called dark adaptation. Although exposure to total darkness for at least 30 minutes is required for complete dark adaptation, a pilot can achieve a moderate degree of dark adaptation within 20 minutes under dim red lighting. Since red light severely distorts colors, especially on aeronautical charts, and can cause serious difficulty in focusing the eyes on objects inside the cabin, its use is advisable only where optimum outside night vision is necessary. Even so, white flight station lighting must be available when needed for map and instrument reading, especially while under IFR conditions. Dark adaptation is impaired by exposure to cabin pressure altitudes above 5000 feet, carbon monoxide inhaled in smoking and from exhaust fumes, deficiency of vitamin A in the diet, and by prolonged exposure to bright sunlight. Since any degree of dark adaptation is lost within a few seconds of viewing a bright light, pilots should close one eye when using a light to preserve some degree of night vision. In addition, use of sunglasses during the day will help speed the process of dark adaptation during night flight.

SCUBA DIVING

A pilot or passenger who flies shortly after prolonged scuba diving could be in serious danger. Anyone who intends to fly after scuba diving should allow the body sufficient time to rid itself of excess nitrogen absorbed during diving. If not, decompression sickness (commonly referred to as the "bends"), due to dissolved gas, can occur even at low altitude and create a serious in-flight emergency. The recommended waiting time before flight to cabin altitudes of 8000 feet or less is at least 12 hours after diving which has not required controlled ascent (non-decompression diving), and at least 24 hours after diving which has required a controlled ascent (decompression diving). The waiting time before flight to cabin pressure altitudes above 8000 feet should be at least 24 hours after any scuba diving.

AEROBATIC FLIGHT

Pilots planning to engage in aerobatic maneuvers should be aware of the physiological stresses associated with accelerative forces during such maneuvers. Forces experienced with a rapid push-over maneuver will result in the blood and body organs being displaced toward the head. Depending on the forces involved and the individual tolerance, the pilot may experience discomfort, headache, "red-out", and even unconsciousness. Forces experienced with a rapid pull-up maneuver result in the blood and body organs being displaced toward the lower part of the body away from the head. Since the brain requires continuous blood circulation for an adequate oxygen supply, there is a physiological limit to the time the pilot can tolerate higher forces before losing consciousness. As the blood circulation to the brain decreases as a result of the forces involved, the pilot will experience "narrowing" of visual fields, "gray-out", "black-out", and unconsciousness.

Physiologically, humans progressively adapt to imposed strains and stresses, and with practice, any maneuver will have a decreasing effect. Tolerance to "G" forces is dependent on human physiology and the individual pilot. These factors include the skeletal anatomy, the cardiovascular architecture, the nervous system, blood make-up, the general physical state, and experience and recency of exposure. A pilot should consult an Aviation Medical Examiner prior to aerobatic training and be aware that poor physical condition can reduce tolerance to accelerative forces.

CHECKLISTS

CONSISTENT USE

Airplane checklists are available for those persons who do not wish to use the operating handbook on every flight. These checklists contain excerpts from the operating handbook written for that particular airplane and are designed to remind pilots of the minimum items to check for safe operation of the airplane, without providing details concerning the operation of any particular system. Checklists should be used by the pilot and not placed in the seat pocket and forgotten. Even pilots who consistently carry the checklists tend to memorize certain areas and intentionally overlook these procedural references. Consequently, in time, these individuals find that operating something as complex as an airplane on memory alone is practically impossible, and eventually, could find themselves in trouble because one or more important items are overlooked or completely forgotten. The consistent use of all checklists is required for the safe operation of an airplane.

NOTE

Abbreviated checklists can be used in place of the airplane operating manual However, they should be used only after the pilot becomes familiar with the airplane operating manual, and thoroughly understands the required procedures for airplane operation.

CONTRIBUTIONS TO SAFETY

Most large airplanes in the transport category are flown by consistent use of all checklists. Experience has shown that pilots who consistently use checklists on every flight maintain higher overall proficiency, and have better safety records. The pilot should not become preoccupied inside the cockpit (such as with a checklist) and fail to remain alert for situations outside the airplane.

CHECKLIST ARRANGEMENT (ORGANIZATION OF ITEMS)

Abbraiviated checklists are written in a concise form to provide pilots with a means of complying with established requirements for the safe operation of their airplane. The checklists are usually arranged by "Item" and "Condition" headings. The item to be checked is listed with the desired condition stated. Key words or switch and lever positions are usually emphasized by capitalization in the "Condition" column. The checklist may also contain supplemental information pertinent to the operation of the airplane, such as performance data, optional equipment operation, etc., that the pilot might routinely use.

EMERGENCY CHECKLISTS

Emergency checklists are provided for emergency situations peculiar to a particular airplane design, operating or handling characteristic. Pilots should periodically review the airplane operating handbook to be completely familiar with information published by the manufacturer concerning the airplane. Emergency situations are never planned and may occur at the worst possible time. During most emergency conditions, there will not be sufficient time to refer to an emergency checklist; therefore, it is essential that the pilot commit to memory those emergency procedures that may be shown in **bold-face** type or outlined with a black border, within the emergency procedures section of operating handbooks or equivalent hand-held checklists. These items are essential for continued safe flight. After the emergency situation is under control, the pilot should complete the checklist in its entirety, in the proper sequence, and confirm that all items have been accomplished. It is essential that the pilot review and know published emergency checklists and any other emergency procedures. Familiarity with the airplane and its systems and a high degree of pilot proficiency are valuable assets if an emergency should arise.

AIRPLANE LOADING

AIRPLANE CENTER-OF-GRAVITY RANGE

Pilots should never become complacent about the weight and balance limitations of an airplane, and the reasons for these limitations. Since weight and balance are vital to safe airplane operation, every pilot should have a thorough understanding of airplane loading, with its limitations, and the principles of airplane balance. Airplane balance is maintained by controlling the position of the center-of-gravity. Overloading, or misloading, may not result in obvious structural damage, but could do harm to hidden structure or produce a dangerous situation in the event of an emergency under those conditions. Overloading, or misloading may also produce hazardous airplane handling characteristics.

There are several different weights to be considered when dealing with airplane weight and balance. These are defined in another paragraph in this supplement. Airplanes are designed with predetermined structural limitations to meet certain performance and flight characteristics and standards. Their balance is determined by the relationship of the center-of-gravity (C.G.) to the center of lift. Normally, the C.G. of an airplane is located slightly forward of the center of lift. The pilot can safely use the airplane flight controls to maintain stabilized balance of the airplane as long as the C.G. is located within specified forward and aft limits. The allowable variation of the C.G. location is called the center-of-gravity range. The exact location of the allowable C.G. range is specified in the operating handbook for that particular airplane.

LOCATING THE LOAD

It is the responsibility of the pilot to ensure that the airplane is loaded properly. Operation outside of prescribed weight and balance limitations could result in an accident and serious or fatal injury.

To determine the center-of-gravity (C.G.) of an airplane, a pilot must have an understanding of the three terms used in weight and balance calculations. These terms are weight, moment, and arm. The principles associated with these terms are applied to each occupant, piece of cargo or baggage, the airplane itself, and to all fuel to determine the overall C.G. of the airplane.

The weight of an object should be carefully determined or calculated. All weights must be measured in the same units as the aircraft empty weight. The arm is the distance that the weight of a particular item is located from the reference datum line or the imaginary vertical line from which all horizontal distances are measured for balance purposes (refer to examples in Figure 1).

The word "moment," as used in airplane loading procedures, is the product
the weight of the object multiplied by the arm.

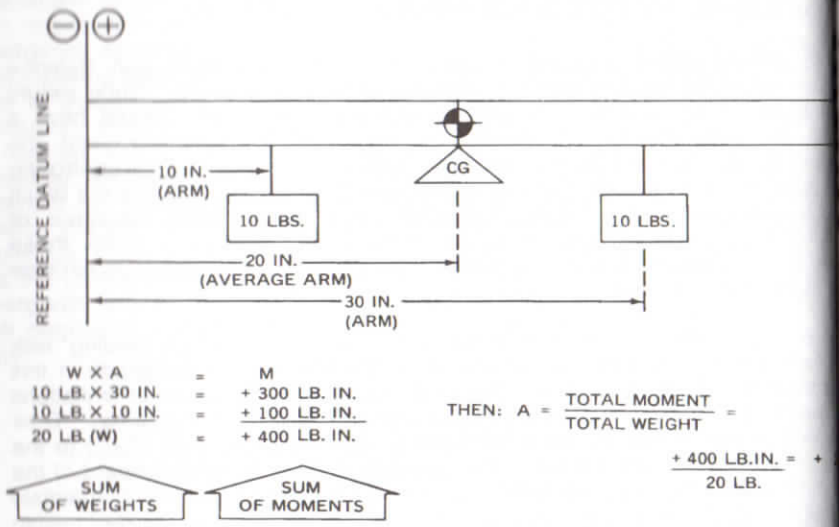

Figure 1. Computing the Center-of-Gravity

Pilots can remember and use the relationship of these terms most easily b
arranging them in a mathematical triangle:



weight × arm = moment
moment ÷ weight = arm
moment ÷ arm = weight

The relative position of any two terms indicates the mathematical proces
(multiplication or division) required to compute the third term.

A loading graph or loading tables, a center-of-gravity limits chart and/or
center-of-gravity moment envelope chart, as well as a sample loading proble
are provided in most airplane operating handbooks. By following the narrativ
directions, the pilot can determine the correct airplane C.G. for an
configuration of the airplane. If the position of the load is different from th
shown on the loading graph or in the loading tables, additional momer

alculations, based on the actual weight and C.G. arm (fuselage station) o
em being loaded, must be performed.

OAD SECURITY

n addition to the security of passengers, it is the pilot's responsibili
etermine that all cargo and/or baggage is secured before flight. W
equired, the airplane may be equipped with tie-down rings or fittings fo
urpose of securing cargo or baggage in the baggage compartment or
rea. The maximum allowable cargo loads to be carried are determine
argo weight limitations, the type and number of tie-downs used, as well
he airplane weight and C.G. limitations. Always carefully observ
recautions listed in the operating handbook concerning cargo tiedown.

ilots should assist in ensuring seat security and proper restraint f
assengers. Pilots should also advise passengers not to put heavy or
ems under occupied seats since these items may interfere with the
nergy absorption characteristics in the event of a crash.

ptional equipment installed in the airplane can affect loading, and the ai
enter-of-gravity. Under certain loading conditions in tricycle gear airpla
s possible to exceed the aft C.G. limit, which could cause the airplane
nd allow the fuselage tailcone to strike the ground while loading the air
he force of a tail ground strike could damage internal structure, resul
ossible interference with elevator control system operation.

FFECTS OF LOADING ON THE FLIGHT

Weight and balance limits are placed on airplanes for three principal re
first, the effect of the weight on the primary and secondary structures; s
the effect on airplane performance; and third, the effect on flight control
particularly in stall and spin recovery.

A knowledge of load factors in flight maneuvers and gusts is import
understanding how an increase in maximum weight affects the charact
of an airplane. The structure of an airplane subjected to a load factor o
must be capable of withstanding an added load of three hundred pou
each hundred pound increase in weight. All Cessna airplanes are a
and tested for flight at the maximum authorized weight, and within the
posted for the type of flight to be performed. Flight at weights in exces
amount may be possible, but loads for which the airplane was not d
may be imposed on all or some part of the structure.

An airplane loaded to the rear limit of its permissible center-of-gravity ra
respond differently than when it is loaded near the forward limit. T

characteristics of an airplane change as the airplane load changes, and st
characteristics become progressively better as center-of-gravity move
forward. Distribution of weight can also have a significant effect on sp
characteristics. Forward location of the C.G. will usually make it more difficu
to obtain a spin. Conversely, extremely aft C.G. locations will tend to promot
lengthened recoveries since a more complete stall can be achieved. Change
in airplane weight as well as its distribution can have an effect on sp
characteristics since increases in weight will increase inertia. Higher weigh
may delay recoveries.

An airplane loaded beyond the forward C.G. limit will be nose heavy, and ca
be difficult to rotate for takeoff or flare for landing. Airplanes with tail whee
can be nosed over more easily.

LOAD AND LATERAL TRIM

Some airplanes have a maximum limit for wing fuel lateral imbalance and/or
maximum wing locker load limitation. These limitations are required for one
both of two primary reasons. The first is to ensure that the airplane w
maintain certain roll responses mandated by its certification. The other is t
prevent overheating and interruption of lateral trim on certain types
autopilots caused by the excessive work required to maintain a wings leve
attitude while one wing is heavier than the other. Pilots should carefull
observe such limitations and keep the fuel balance within the limits set forth
the respective operating handbook.

WEIGHT AND BALANCE TERMINOLOGY

The following list is provided in order to familiarize pilots and owners with th
terminology used in calculating the weight and balance of Cessna airplanes
(Some terminology listed herein is defined and used in Pilot's Operatin
Handbooks only.)

Arm	The horizontal distance from the reference datum t the center-of-gravity (C.G.) of an item.
Basic Empty Weight	The standard empty weight plus the weight o installed optional equipment.

.G. Arm	The arm obtained by adding the airplane's individual moments and dividing the sum by the total weight.
.G. Limits	The extreme center-of-gravity locations within which the airplane must be operated at a given weight.
enter-of-Gravity (C.G.)	The point at which an airplane or item of equipment would balance if suspended. Its distance from the reference datum is found by dividing the total moment by the total weight of the airplane or item of equipment.
MAC	The mean aerodynamic chord of a wing is the chord of an imaginary airfoil which throughout the flight range will have the same force vectors as those of the wing.
Maximum Landing Weight	The maximum weight approved for the landing touchdown.
Maximum Ramp Weight	The maximum weight approved for ground maneuvers. It includes the weight of start, taxi and runup fuel.
Maximum Takeoff Weight	The maximum weight approved for the start of the takeoff roll.
Maximum Zero Fuel Weight	The maximum weight exclusive of usable fuel.
Moment	The product of the weight of an item multiplied by its arm. (Moment divided by a constant is used to simplify balance calculations by reducing the number of digits.)
Payload	The weight of occupants, cargo, and baggage.
Reference Datum	An imaginary vertical plane from which all horizontal distances are measured for balance purposes.
Standard Empty Weight	The weight of a standard airplane, including unusable fuel, full operating fluids and full engine oil. In those manuals which refer to this weight as Licensed Empty Weight, the weight of engine oil is not included and must be added separately in weight and balance calculations.)
Station	A location along the airplane fuselage given in terms of the distance from the reference datum.

Tare	The weight of chocks, blocks, stands, etc., used whe weighing an airplane, and is included in the sca readings. Tare is deducted from the scale reading obtain the actual (net) airplane weight.
Unusable Fuel	The quantity of fuel that cannot be safely used flight.
Usable Fuel	The fuel available for flight planning.
Useful Load	The difference between ramp weight and the bas empty weight.

INGLE ENGINE FLIGHT NFORMATION (MULTI-ENGINE IRPLANES)

NTRODUCTION

he following discussion is intended primarily for pilots of propeller-driven, light win engine airplanes, powered by reciprocating engines and certified under AR Part 3 or FAR Part 23. This discussion is not intended to apply to specific models, but is intended, instead, to give general guidelines or recommendations for operations in the event of an engine failure during flight.

INGLE ENGINE TAKEOFF AND CLIMB

ach time a pilot considers a takeoff in a twin-engine airplane, knowledge is equired of the Minimum Control Speed (V_{MC}) for that particular airplane. Knowledge of this speed, is essential to ensure safe operation of the airplane n the event an engine power loss occurs during the most critical phases of light, the takeoff and initial climb.

V_{MC} is the minimum flight speed at which the airplane is directionally and laterally controllable as determined in accordance with Federal Aviation Regulations. Airplane certification conditions include: one engine becoming inoperative and windmilling; not more than a 5-degree bank toward the operative engine; takeoff power on the operative engine; landing gear retracted; flaps in the takeoff position; and the most critical C.G. (center of gravity). A multi-engine airplane must reach the minimum control speed before full control deflections can counteract the adverse rolling and/or yawing tendencies associated with one engine inoperative and full power operation on the other engine. The most critical time for an engine failure is during a two or three second period, late in the takeoff, while the airplane is accelerating to a safe speed.

Should an engine failure be experienced before liftoff speed is reached, the takeoff must be aborted. If an engine failure occurs immediately after liftoff, but before the landing gear is retracted, continue takeoff while retracting gear. Abort takeoff only if sufficient runway is available. This decision should be made before the takeoff is initiated.

The pilot of a twin-engine airplane must exercise good judgment and take prompt action in the decision whether or not to abort a takeoff attempt following an engine failure, since many factors will influence the decision.

Some of these factors include: runway length, grade and surface conditi
(i.e., slippery, dry, etc.), field elevation, temperature, wind speed and directio
terrain or obstructions in the vicinity of the runway, airplane weight and sing
engine climb capability under the prevailing conditions, among others. T
pilot should abort the takeoff, following an engine-out, even if the airplane h
lifted off the runway, if runway conditions permit. However, under limit
circumstances (i.e., short runway with obstructions) the pilot may have
continue the takeoff following a liftoff and an engine-out.

While it may be possible to continue the takeoff at light weights and w
favorable atmospheric conditions following an engine failure just after lift
long distances are required to clear even small obstacles. Distances requir
to clear an obstacle are reduced under more favorable combinations of weig
headwind component, or obstacle height.

The pilot's decision to continue the takeoff after an engine failure should b
based on consideration of either the single engine best angle-of-climb spe
(V_{XSE}) if an obstacle is ahead, or the single engine best rate-of-climb spe
(V_{YSE}) when no obstacles are present in the climb area. Once the sing
engine best angle-of-climb speed is reached, altitude becomes more importa
than airspeed until the obstacle is cleared. On the other hand, the sing
engine best rate-of-climb speed becomes more important when there are
obstacles ahead. Refer to the Owners Manual, Flight Manual or Pilot
Operating Handbook for the proper airspeeds and procedures to be used
the event of an engine failure during takeoff. Refer to the warning placard "
Continue Flight With An Inoperative Engine" in the airplane's operati
handbook and/or on the instrument panel for additional information.

Should an engine failure occur at or above these prescribed airspeeds, th
airplane, within the limitations of its single engine climb performance, should b
maneuvered to a landing. After the airplane has been "cleaned up" followi
an engine failure (landing gear and wing flaps retracted and the propell
feathered on the inoperative engine), it may be accelerated to its single engi
best rate-of-climb speed. If immediate obstructions so dictate, the sing
engine best angle-of-climb speed may be maintained until the obstacles a
cleared. In no case should the speed be allowed to drop below single engi
best angle-of-climb speed unless an immediate landing is planned, sin
airplane performance capabilities will deteriorate rapidly as the airspe
decreases. After clearing all immediate obstacles, the airplane should b
accelerated slowly to its single engine best rate-of-climb speed and the clim
continued to a safe altitude which will allow maneuvering for a return to th
airport for landing.

To obtain single engine best climb performance with one engine inoperativ
the airplane must be flown in a 3 to 5 degree bank toward the operati
engine. The rudder is used to maintain straight flight, compensating for th
asymmetrical engine power. The ball of the turn-and-bank indicator should n

centered, but should be displaced about 1/2 ball width toward the operating
ngine.

he propeller on the inoperative engine must be feathered, the landing gear
tracted, and the wing flaps retracted for continued safe flight. Climb
rformance of an airplane with a propeller windmilling usually is nonexistent.
nce the decision to feather a propeller has been made, the pilot should
sure that the propeller feathers properly and remains feathered. The landing
ar and wing flaps also cause a severe reduction in climb performance and
th should be retracted as soon as possible (in accordance with the
erating handbook limitations).

he following general facts should be used as a guide if an engine failure
curs during or immediately after takeoff:

1. Discontinuing a takeoff upon encountering an engine failure is advisable under most circumstances. Continuing the takeoff, if an engine failure occurs prior to reaching single engine best angle-of-climb speed and landing gear retraction, is not advisable.
2. Altitude is more valuable to safety immediately after takeoff than is airspeed in excess of the single engine best angle-of-climb speed.
3. A windmilling propeller and extended landing gear cause a severe drag penalty and, therefore, climb or continued level flight is improbable, depending on weight, altitude and temperature. Prompt retraction of the landing gear (except Model 337 series), identification of the inoperative engine, and feathering of the propeller is of utmost importance if the takeoff is to be continued.
4. Unless touchdown is imminent, in no case should airspeed be allowed to fall below single engine best angle-of-climb speed even though altitude is lost, since any lesser speed will result in significantly reduced climb performance.
5. If the requirement for an immediate climb is not present, allow the airplane to accelerate to the single engine best rate-of-climb speed since this speed will always provide the best chance of climb or least altitude loss.

SINGLE ENGINE CRUISE

Losing one engine during cruise on a multi-engine airplane causes little immediate problem for a proficient, properly trained pilot. After advancing power on the operating engine and retrimming the airplane to maintain altitude, if possible the pilot should attempt to determine if the cause of the engine failure can be corrected in flight prior to feathering the propeller. The magneto/ignition switches should be checked to see if they are on, and the fuel flow and fuel quantity for the affected engine should also be verified. If the engine failure was apparently caused by fuel starvation, switching to another fuel tank and/or turning on the auxiliary fuel pump (if equipped) or adjusting the

mixture control may alleviate the condition. It must be emphasized that the procedures are not designed to replace the procedural steps listed in t emergency procedures section of the airplane operating handbook, but a presented as a guide to be used by the pilot if, in his or her judgme corrective action should be attempted prior to shutting down a failing malfunctioning engine. Altitude, terrain, weather conditions, weight, a accessibility of suitable landing areas must all be considered before attempti to determine and/or correct the cause of an engine failure. In any event, if engine fails in cruise and cannot be restarted, a landing at the nearest suitab airport is recommended.

SINGLE ENGINE APPROACH AND LANDING OR GO-AROUND

An approach and landing with one engine inoperative on a multi-engi airplane can easily be completed by a proficient, properly trained pil However, the pilot must plan and prepare the airplane much earlier th normal to ensure success. While preparing, fuel should be scheduled so t an adequate amount is available for use by the operative engine. crossfeeding should be completed during level flight above a minimum altitu of 1000 feet AGL.

During final approach, the pilot should maintain the single engine best rate- climb speed or higher, until the landing is assured. An attempt should made to keep the approach as normal as possible, considering the situatio Landing gear should be extended on downwind leg or over the final approa fix, as applicable. Flaps should be used to control the descent through t approach.

Consideration should be given to a loss of the other engine or the necessity make an engine inoperative go around. Under certain combinations of weig temperature and altitude, neither level flight nor a single engine go-around m be possible. Do not attempt an engine inoperative go-around after the wi flaps have been extended beyond the normal approach or the publish approach flap setting, unless enough altitude is available to allow the wi flaps to be retracted to the normal approach or the published approach fl setting, or less.

PILOT PROFICIENCY

AIRSPEED CONTROL

lying other than published airspeeds could put the pilot and airplane in an safe situation. The airspeeds published in the airplane's operating andbook have been tested and proven to help prevent unusual situations. r example, proper liftoff speed puts the airplane in the best position for a nooth transition to a climb attitude. However, if liftoff is too early, drag creases and consequently increases the takeoff ground run. This procedure so degrades controllability of multi-engine airplanes in the event an engine ilure occurs after takeoff. In addition, early liftoff increases the time required accelerate from liftoff to either the single-engine best rate-of-climb speed V_{YSE}) or the single-engine best angle-of-climb speed (V_{XSE}) if an obstacle is ised. On the other hand, if liftoff is late, the airplane will tend to "leap" into climb. Pilots should adhere to the published liftoff or takeoff speed for their rticular airplane.

he pilot should be familiar with the stall characteristics of the airplane when alled from a normal 1 G stall. Any airplane can be stalled at any speed. The bsolute maximum speed at which full aerodynamic control can be safely plied is listed in the airplane's operating handbook as the maneuvering peed. Do not make full or abrupt control movements above this speed. To o so could induce structural damage to the airplane.

TRAFFIC PATTERN MANEUVERS

here have been incidents in the vicinity of controlled airports that were aused primarily by pilots executing unexpected maneuvers. Air Traffic ontrol (ATC) service is based upon observed or known traffic and airport conditions. Air Traffic Controllers establish the sequence of arriving and departing airplanes by advising them to adjust their flight as necessary to achieve proper spacing. These adjustments can only be based on observed traffic, accurate pilot radio reports, and anticipated airplane maneuvers. Pilots are expected to cooperate so as to preclude disruption of the traffic flow or the creation of conflicting traffic patterns. The pilot in command of an airplane is directly responsible for and is the final authority as to the operation of his or her airplane. On occasion, it may be necessary for a pilot to maneuver an airplane to maintain spacing with the traffic he or she has been sequenced to follow. The controller can anticipate minor maneuvering such as shallow "S" turns. The controller cannot, however, anticipate a major maneuver such as a 360 degree turn. This can result in a gap in the landing interval and more importantly, it causes a chain reaction which may result in a conflict with other traffic and an interruption of the sequence established by the tower or

approach controller. The pilot should always advise the controller of the ne
to make any maneuvering turns.

USE OF LIGHTS

Aircraft position (navigation) and anti-collision lights are required to
illuminated on aircraft operated at night. Anti-collision lights, however, may
turned off when the pilot in command determines that, because of operati
conditions, it would be in the interest of safety to do so. For example, strob
lights should be turned off on the ground when they adversely affect grou
personnel or other pilots, and in flight when there are adverse reflections fro
clouds.

To enhance the "see-and-avoid" concept, pilots are encouraged to turn
their rotation beacon any time the engine(s) are operating, day or night. Pilo
are further encouraged to turn on their landing lights when operating within t
miles of any airport, day or night, in conditions of reduced visibility and are
where flocks of birds may be expected (i.e., coastal areas, around refu
dumps, etc.). Although turning on airplane lights does enhance the "see-an
avoid" concept, pilots should not become complacent about keeping a sha
lookout for other airplanes. Not all airplanes are equipped with lights a
some pilots may not have their lights turned on. Use of the taxi light, in lieu
the landing light, on some smaller airplanes may extend the landing lig
service life.

Propeller and jet blast forces generated by large airplanes have overturned
damaged several smaller airplanes taxiing behind them. To avoid simil
results, and in the interest of preventing upsets and injuries to grou
personnel from such forces, the FAA recommends that air carriers a
commercial operators turn on their rotating beacons anytime their airpla
engine(s) are operating. All other pilots, using airplanes equipped with rotati
beacons, are also encouraged to participate in this program which is designe
to alert others to the potential hazard. Since this is a voluntary progra
exercise caution and do not rely solely on the rotating beacon as an indicati
that airplane engines are operating.

PARTIAL PANEL FLYING

All pilots, and especially instrument rated pilots, should know the emergen
procedures for partial instrument panel operation included in their respectiv
operating handbook, as well as any FAA training material on the subje
Routine periodic practice under simulated instrument conditions with a parti
instrument panel can be very beneficial to a pilot's proficiency. In this cas

pilot should have a qualified safety pilot monitoring the simulated
trument practice.
a second vacuum system is not installed and a complete vacuum system
ilure occurs during flight, the vacuum-driven directional indicator and attitude
dicator will be disabled, and the pilot will have to rely on the turn coordinator
the turn and bank indicator if he or she flies into instrument meteorological
nditions. If an autopilot is installed, it too will be affected, and should not be
ed. The following instructions assume that only the electrically-powered turn
ordinator is operative, and that the pilot is not completely proficient in
trument flying.

XECUTING A 180° TURN IN CLOUDS

pon inadvertently entering a cloud(s), an immediate plan should be made to
rn back as follows:

1. Note compass heading.
2. Note the time in both minutes and seconds.
3. When the seconds indicate the nearest half-minute, initiate a standard rate left turn, holding the turn coordinator (or turn and bank indicator if installed) symbolic airplane wing opposite the lower left wing index mark for 60 seconds. Then roll back to level flight by leveling the miniature airplane.
4. Assure level flight through and after the turn by referencing the altimeter, VSI, and airspeed indicator. Altitude may be maintained with cautious use of the elevator controls.
5. Check accuracy of turn by observing the compass heading which should be the reciprocal of the original heading.
6. If necessary, adjust heading primarily with skidding motions rather than rolling motions so that the compass will read more accurately.
7. Maintain altitude and airspeed by cautious application of elevator control. Avoid over-controlling by keeping the hands off the control wheel as much as possible and steering only with the rudder.

EMERGENCY DESCENT THROUGH CLOUDS

f conditions preclude reestablishment of VFR flight by a 180° turn, a descent
hrough a cloud deck to VFR conditions may be appropriate. If possible,
btain ATC clearance for an emergency descent. To guard against a spiral
ive, choose an easterly or westerly heading to minimize compass card swings
due to changing bank angles. In addition, keep hands off the control wheel
and steer a straight course with rudder control by monitoring the turn and bank
or turn coordinator. Occasionally check the compass heading and make minor
corrections to hold an approximate course. Before descending into the clouds,
set up a stabilized let-down condition as follows:

1. Extend the landing gear (if applicable).

2. Reduce power to set up a 500 to 800 ft/min rate of descent.
3. Adjust mixture(s) as required for smooth engine operation.
4. Adjust elevator or stabilizer, rudder and aileron trim controls for stabilized descent.
5. Keep hands off the control wheel. Monitor turn and bank or the coordinator and make corrections by rudder alone.
6. Check trend of compass card movement and make cautious corrections with rudder inputs to stop turn.
7. Upon breaking out of the clouds, resume normal cruising flight.

RECOVERY FROM A SPIRAL DIVE

If a spiral dive is encountered while in the clouds, proceed as follows:

1. Retard the throttle(s) to idle.
2. Stop the turn by using coordinated aileron and rudder control to align the symbolic airplane in the turn coordinator with the horizon reference line, or center the turn needle and ball of the turn and bank indicator.
   a. With a significant airspeed increase or altitude loss while in the spiral, anticipate that the aircraft will pitch nose-up when the wings are level. Take care not to overstress the airframe as a result of this nose-up pitching tendency.
3. Cautiously apply control wheel back pressure (if necessary) to slowly reduce the airspeed.
4. Adjust the elevator or stabilizer trim control to maintain a constant glide airspeed.
5. Keep hands off the control wheel, using rudder control to hold a straight heading. Use rudder trim to relieve unbalanced rudder force if present.
6. If the power-off glide is of sufficient duration, adjust the mixture(s), as required.
7. Upon breaking out of the clouds, resume normal cruising flight.

USE OF LANDING GEAR AND FLAPS

A review of airplane accident investigation reports indicates a complacent attitude on the part of some pilots toward the use of checklists for landing gear and wing flap operation. The main confession of most pilots involved in involuntary gear-up landings is that they "forgot" to lower the gear prior to landing. Consistent use of the Before Landing Checklist would have alerted these pilots and prevented a potentially hazardous situation. Other causes of gear-up landings have been attributed to poor judgment, such as not leaving the landing gear extended while performing several landings while remaining in the traffic pattern. The following recommendations will lessen the possibility of a gear-up landing.

1. Never move the landing gear control switch, handle, or lever while the airplane is on the ground.
2. Do not deliberately disable any landing gear warning device or light unless indicated otherwise in the operating handbook.
3. Apply brakes before retraction of the landing gear to stop wheel rotation.
4. After takeoff, do not retract the landing gear until a positive rate of climb is indicated.
5. When selecting a landing gear position, whether up or down, allow the landing gear to complete the initial cycle to the locked position before moving the control switch, handle, or lever in the opposite direction.
6. Never exceed the published landing gear operating speed (V_{LO}) while the landing gear is in transit or the maximum landing gear extended speed (V_{LE}).
7. Prepare for landing early in the approach so that trim adjustments after lowering landing gear or flaps will not compromise the approach.
8. Leave landing gear extended during consecutive landings when the airplane remains in the traffic pattern unless traffic pattern speeds exceed the Maximum Landing Gear Extended Speed (V_{LE}).

A rare, but serious problem that may result from a mechanical failure in the flap system is split wing flaps. This phenomenon occurs when the wing flap position on one wing does not agree with the flap position on the opposite wing, causing a rolling tendency. Split flaps can be detected and safely countered if flap control movement is limited to small increments during inflight operations from full down to full up and full up to full down. If a roll is detected during flap selection, reposition the flap selector to the position from which it was moved and the roll should be eliminated. Depending on the experience and proficiency of the pilot, the rolling tendencies caused by a split flap situation may be controlled with opposite aileron (and differential power for multi-engine aircraft). Some documented contributing factors to split flaps are:

1. Pilots exceeding the Maximum Flap Extended (V_{FE}) speed for a given flap setting.
2. Mechanical failure.
3. Improper maintenance.

ILLUSIONS IN FLIGHT

Many different illusions can be experienced in flight. Some can lead to spatial disorientation. Others can lead to landing errors. Illusions rank among the most common factors cited as contributing to fatal airplane accidents. Various complex motions and forces and certain visual scenes encountered in flight can create illusions of motion and position. Spatial disorientation from these illusions can be prevented only by visual reference to reliable, fixed points on the ground, or to flight instruments.

An abrupt correction of banked attitude, which has been entered too slowly stimulate the motion sensing system in the middle ear, can create the illus of banking in the opposite direction. The disoriented pilot will roll the airpla back to its original dangerous attitude or, if level flight is maintained, will f compelled to lean in the perceived vertical plane until this illusion subsid This phenomenon is usually referred to as the "leans" and the follow illusions fall under this category.

1. **Coriolis illusion** - An abrupt head movement in a prolonged consta rate turn that has ceased stimulating the motion sensing system c create the illusion of rotation or movement on an entirely different ax The disoriented pilot will maneuver the airplane into a dangero attitude in an attempt to stop this illusion of rotation. This m overwhelming of all illusions in flight may be prevented by not maki sudden, extreme head movements, particularly while maki prolonged constant-rate turns under IFR conditions.
2. **Graveyard spin** - A proper recovery from a spin that has ceas stimulating the motion sensing system can create the illusion spinning in the opposite direction. The disoriented pilot will return t airplane to its original spin.
3. **Graveyard spiral** - An observed loss of altitude during a coordinat constant-rate turn that has ceased stimulating the motion sens system can create the illusion of being in a descent with the wi level. In this case, the disoriented pilot will pull back on the contro tightening the spiral and increasing the normal load factor on t airplane.
4. **Somatogravic illusion** - A rapid acceleration during takeoff c create the illusion of being in a nose up attitude. The disoriented pi will push the airplane into a nose low, or dive attitude. A rap deceleration by a quick reduction of the throttle(s) can have t opposite effect, with the disoriented pilot pulling the airplane into nose up, or stall attitude.
5. **Inversion illusion** - An abrupt change from climb to straight and le flight can create the illusion of tumbling backwards. The disorient pilot will push the airplane abruptly into a nose low attitude, possib intensifying this illusion.
6. **Elevator illusion** - An abrupt upward vertical acceleration, usua caused by an updraft, can create the illusion of being in a climb. T disoriented pilot will push the airplane into a nose low attitude. A abrupt downward vertical acceleration, usually caused by a downdra has the opposite effect, with the disoriented pilot pulling the airpla into a nose up attitude.
7. **False horizon** - Sloping cloud formations, an obscured horizon, a da scene spread with ground lights and stars, and certain geomet patterns of ground light can create illusions of not being align correctly with the horizon. The disoriented pilot will place the airpla in a dangerous attitude.

8. **Autokinesis** - In the dark, a static light will appear to move about when stared at for many seconds. The disoriented pilot will lose control of the airplane in attempting to align it with the light.

arious surface features and atmospheric conditions encountered during nding can create illusions of incorrect height above and distance away from e runway threshold. Landing errors from these illusions can be prevented y anticipating them during approaches, aerial visual inspection of unfamiliar rports before landing, using an electronic glide slope or visual approach ope indicator (VASI) system when available, and maintaining optimum ficiency in landing procedures. The following illusions apply to this tegory.

1. **Runway width illusion** - A narrower than usual runway can create the illusion that the airplane is at a higher altitude than it actually is. The pilot who does not recognize this illusion will tend to fly a lower approach, with the risk of striking objects along the approach path, or land short. A wider than usual runway can have the opposite effect, with the risk of flaring high and landing hard or overshooting the runway.
2. **Runway and terrain slopes illusion** - An up sloping runway, up sloping terrain, or both, can create the illusion that the airplane is at a higher altitude than it actually is. The pilot who does not recognize this illusion will fly a lower approach. A down sloping runway, down sloping approach terrain, or both, can have the opposite effect.
3. **Featureless terrain illusion** - An absence of ground features, as when landing over water, darkened areas and terrain made featureless by snow, can create the illusion that the airplane is at a higher altitude than it actually is. The pilot who does not recognize this illusion will tend to fly a lower approach.
4. **Atmospheric illusion** - Rain on the windshield can create an illusion of greater height, and a greater distance from the runway. The pilot who does not recognize this illusion will tend to fly a lower approach. Penetration of fog can create the illusion of pitching up. The pilot who does not recognize this illusion will steepen the approach, often quite abruptly.
5. **Ground lighting illusions** - Lights along a straight path, such as a road, and even lights on trains, can be mistaken for runway and approach lights. Bright runway and approach lighting systems, especially where few lights illuminate the surrounding terrain, may create the illusion of less distance to the runway. The pilot who does not recognize this illusion will tend to fly a higher approach. Conversely, the pilot overflying terrain which has few lights to provide height cues may make a lower than normal approach.

SPATIAL DISORIENTATION

Spatial disorientation is the confusion of the senses affecting balance, wh occurs when a person is deprived of the normal cues upon which he or depends for "indexing" a sense of balance. These cues include, m prominently, his or her visual reference to the earth's horizon and celes bodies, and his or her acceptance of the force of gravity as acting vertica When flying an airplane, the pilot may have all outside visual referen obscured by clouds or complete darkness, and his interpretation of direction of gravity may become confused by forces imposed on his or body by centrifugal force, accelerations of maneuvering, and turbulence, wh may act in any direction.

Spatial disorientation usually leads to vertigo, but is not necessarily identica it. Vertigo is an uncertain feeling of disorientation, turning, or imbalance, wh is usually accompanied by feelings of dizziness or incipient nausea.

When flying by reference to the natural horizon, the attitude of the airplane be determined visually at all times. During instrument flight, when the natu horizon is not visible, the attitude of the airplane must be determined from gyro horizon and other flight instruments. Sight, supported by other sens maintains orientation in either case.

Sometimes during conditions of low visibility, the supporting senses con with what is seen or what the pilot believes he sees. When this happe there is a definite susceptibility to disorientation. The degree of disorientat varies considerably with individual pilots, their proficiency, and the conditi which induced the problem. Complete disorientation, even for a short per of time, can render a pilot incapable of controlling an airplane, to the ext that he cannot maintain level flight, or even prevent fatal turns and div spirals.

Lack of effective visual reference is common on over-water flights at night, in low visibility conditions over land. Other contributing factors to disorientat and vertigo are reflections from outside lights, and cloud reflections of bea from rotating beacons or strobe lights.

It is important that all pilots understand the possibility of spatial disorientati and the steps necessary to minimize the loss of control as a result of it. T following basic items should be known to every pilot:

1. Obtain training and maintain proficiency in the control of an airplane reference to instruments before flying in visibility of less than th miles.
2. Refer to the attitude instruments frequently when flying at night or reduced visibility conditions.

3. To maintain competency in night operations, practice should include operations in the traffic pattern, subject to the confusion caused by reflections of ground lights, as well as the control of an airplane by reference to instruments.
4. Familiarization with the meteorological conditions which may lead to spatial disorientation is important. These include smoke, fog, haze, and other restrictions to visibility.
5. Familiarity with local areas and commonly used flight routes assists in the avoidance of disorientation by permitting the pilot to anticipate and look for prominent terrain features.
6. The most important precaution for avoiding disorientation is the habit of thoroughly checking the weather before each flight, while enroute, and near the destination.

pilot without the demonstrated competence to control an airplane by sole ference to instruments has little chance of surviving an unintentional flight to IFR conditions. Tests conducted by the U.S. Air Force, using qualified strument pilots, indicate that it may take as long as 35 seconds to establish control by reference to instruments after disorientation during an attempt to ntain VFR flight in IFR weather. Instrument training and certification and oping recurrent training in accordance with FAR Part 61, are designed to vide the pilot with the skills needed to maintain control solely by reference flight instruments and the ability to ignore the false kinesthetic sensations ferent with flight when no outside references are available.

OUNTAIN FLYING

pilot's first experience of flying over mountainous terrain (particularly if most his or her flight time has been over flatlands) could be a never-to-be-gotten experience if proper planning is not done and if the pilot is not aware potential hazards. Those familiar section lines in some regions are not sent in the mountains. Flat, level fields for forced landings are practically nexistent; abrupt changes in wind direction and velocity may occur; severe owndrafts and downdrafts are common during high wind conditions, particularly ear or above abrupt changes of terrain, such as cliffs or rugged areas; and rbulence can build up with startling rapidity. Mountain flying need not be zardous if you follow the recommendations below:

1. For pilots with little or no mountain flying experience, always get dual instruction from a qualified flight instructor to become familiar with conditions which may be encountered before flying in mountainous terrain.
2. Plan your route to avoid topography which would prevent a safe forced landing. The route should be near populated areas and well known mountain passes. Sufficient altitude should be maintained to permit gliding to a safe landing in the event of engine failure.
3. Always file a flight plan.

4. Don't fly a light airplane when the winds aloft, at your propos altitude, exceed 35 miles per hour. Expect the winds to be of m greater velocity over mountain passes than reported a few miles fr them. Approach mountain passes with as much altitude as possit Downdrafts of from 1500 to 2000 feet per minute are not uncomm on the leeward (downwind) side.
5. Severe turbulence can be expected near or above changes in terra especially in high wind conditions.
6. Some canyons run into a dead end. Don't fly so far into a canyon t you get trapped. Always be able to make a 180-degree turn, o canyon flying is necessary, fly down the canyon (toward lower terra not up the canyon (toward higher terrain).
7. Plan the trip for the early morning hours. As a rule, the air starts get turbulent at about 10 a.m., and grows steadily worse until arou 4 p.m., then gradually improves until dark.
8. When landing at a high altitude airfield, the same indicated airspe should be used as at low elevation fields. Due to the less dense at altitude, this same indicated airspeed actually results in a hig true airspeed, a faster landing speed, and a longer landing distan During gusty wind conditions, which often prevail at high altitude fie a "power approach" is recommended. Additionally, due to the fa ground speed and reduced engine performance at altitude, the tak distance will increase considerably over that required at lo altitudes.

OBSTRUCTIONS TO FLIGHT

Pilots should exercise extreme caution when flying less than 2000 feet ab ground level (AGL) because of the numerous structures (radio and televi antenna towers) exceeding 1000 feet AGL, with some extending higher t 2000 feet AGL. Most truss type structures are supported by guy wires. T wires are difficult to see in good weather and can be totally obscured du periods of dusk and reduced visibility. These wires can extend approxima 1500 feet horizontally from a structure; therefore, all truss type structu should be avoided by at least 2000 feet, horizontally and vertically.

Overhead transmission and utility lines often span approaches to runways scenic flyways such as lakes, rivers, and canyons. The supporting structu of these lines may not always be readily visible and the wires may be virtu invisible under certain conditions. Most of these installations do not m criteria which determine them to be obstructions to air navigation therefore, do not require marking and/or lighting. The supporting structure some overhead transmission lines are equipped with flashing strobe lig These lights indicate wires exist between the strobe equipped structures.

UEL MANAGEMENT

OOR TECHNIQUES

fuel management is often the cause of aircraft accidents. Some airplane dent reports have listed such poor fuel management techniques as ching to another fuel tank after the before takeoff runup was completed, then experiencing engine problems on takeoff. Other reports tell of pilots ching fuel tanks at a critical point on the approach to a landing and vertently selecting an empty tank when there is not enough time to pensate for the subsequent loss of power. Flying low during day cross- ry, or moderately low at night, can be hazardous if a fuel tank runs dry. much altitude may be lost during the time it takes to discover the reason power loss, select a different fuel tank, and restart the engine. Pilots ot be thoroughly familiar with the airplane fuel system and tank switching edures. Furthermore, it is an unsafe technique to run a fuel tank dry as a ous procedure, although there are exceptions. Any sediment or water not ected from the fuel tank could be drawn into the fuel system and cause ine operation or even total power loss.

ELING THE AIRCRAFT

aircraft should be on level ground during all fueling operations, since filling tanks when the aircraft is not level may result in a fuel quantity less than maximum capacity. Rapid filling of a fuel tank, without allowing time for air his tank to escape, may result in a lower fuel quantity. Some single engine raft that allow simultaneous use of fuel from more than one tank have fuel s with interconnected vent lines. If the tanks are filled with fuel and the raft allowed to sit with one wing lower than the other, fuel may drain from higher tank to the lower and subsequently out the fuel vent. This will result loss of fuel. This fuel loss may be prevented by placing the fuel selector in sition other than "both".

Cessna single-engine airplanes have long, narrow fuel tanks. If your plane is so equipped, it may be necessary to partially fill each tank ially, and repeat the sequence as required to completely fill the tanks to maximum capacity. This method of fueling helps prevent the airplane ng to a wing-low attitude because of increased fuel weight in the ull wing tank.

is always the responsibility of the pilot-in-command to ensure sufficient fuel is ilable for the planned flight. Refer to the airplane operating handbook for per fueling procedures.

UNUSABLE FUEL

Unusable fuel is the quantity of fuel that cannot safely be used in flight amount of unusable fuel varies with airplane and fuel system design, a maximum amount is determined in accordance with Civil or Federal A Regulations (CARs or FARs). Unusable fuel is always included airplane's licensed or basic empty weight for weight and balance pur Unusable fuel should never be included when computing the endurance airplane.

FUEL PLANNING WITH MINIMUM RESERVES

Airplane accidents involving engine power loss continue to reflec starvation as the primary cause or a contributing factor. Some of accidents were caused by departing with insufficient fuel onboard to co the intended flight. Fuel exhaustion in flight can mean only one thi forced landing with the possibility of serious damage, injury, or death.

A pilot should not begin a flight without determining the fuel require verifying its presence onboard. To be specific, during VFR conditions, take off unless there is enough fuel to fly to the planned dest (considering wind and forecast weather conditions), assuming the airp normal cruising airspeed, fly after that for at least 30 minutes during the d at least 45 minutes at night.

Departure fuel requirements are a little different when operating unde conditions. Do not depart an airport on an IFR trip unless the airplan enough fuel to complete the flight to the first airport of intended l (considering weather reports and forecasts) and fly from that airport planned alternate airport, and afterwards still fly at least 45 minutes at cruising speed.

FLIGHT COORDINATION VS. FUEL FLOW

The shape of most airplane wing fuel tanks is such that, in certain maneuvers, the fuel may move away from the fuel tank supply outlet. outlet is uncovered, fuel flow to the engine may be interrupted and a tem loss of power might result. Pilots can prevent inadvertent uncovering tank outlet by having adequate fuel in the tank selected and av maneuvers such as prolonged uncoordinated flight or sideslips which fuel away from the feed lines.

It is important to observe the uncoordinated flight or sideslip limitations li the respective operating handbook. As a general rule, limit uncoord flight or sideslip to 30 seconds in duration when the fuel level in the se fuel tank is 1/4 full or less. Airplanes are usually considered in a s anytime the turn and bank "ball" is more than one quarter ball out center (coordinated flight) position. The amount of usable fuel decrease the severity of the sideslip in all cases.

L SELECTION FOR APPROACH/LANDING

me single-engine airplanes, the fuel selector valve handle is normally ned to the BOTH position to allow symmetric fuel feed from each wing nk. However, if the airplane is not kept in coordinated flight, unequal fuel may occur. The resulting wing heaviness may be corrected during flight ning the fuel selector valve handle to the tank in the "heavy" wing. On single-engine airplanes, the fuel selector has LEFT ON or RIGHT ON ons, and takeoffs and landings are to be accomplished using fuel from ller tank.

multi-engine airplanes have fuel tanks in each wing or in wing tip tanks, it is advisable to feed the engines symmetrically during cruise so that imately the same amount of fuel will be left in each side for descent, roach, and landing. If fuel has been consumed at uneven rates between wing tanks because of prolonged single-engine flight, fuel leak or n, or improper fuel servicing, it is desirable to balance the fuel load by ing both engines from the fuller tank. However, as long as there is ent fuel in both wing tanks, even though they may have unequal ities, it is important to switch the left and right fuel selectors to the left ght wing tanks, respectively, feeling for the detent, prior to the approach. will ensure that adequate fuel flow will be available to each operating ne if a go-around is necessary. In the case of single-engine operation, ve from the fuller tank, attempting to have a little more fuel in the wing on site with the operating engine prior to descent.

multi-engine airplanes equipped with wing tip fuel tanks, the tip tanks are main fuel tanks on the tank selector valve controls. Refer to Supplement of this Pilot Safety and Warning Supplements Manual and the applicable plane operating handbook.

RFRAME ICING

should monitor weather conditions while flying and should be alert to tions which might lead to icing. Icing conditions should be avoided when ble, even if the airplane is certified and approved for flight into known areas. A climb normally is the best ice avoidance action to take. natives are a course reversal or a descent to warmer air. If icing tions are encountered inadvertently, immediate corrective action is ed.

HT INTO KNOWN ICING

into known icing is the intentional flight into icing conditions that are to exist. Icing conditions exist anytime the indicated OAT (outside air erature) is +10°C or below, or the RAT (ram air temperature) is +10°C ow, and visible moisture in any form is present. Any airplane that is not ically certified for flight into known icing conditions, is prohibited by tions from doing so.

cumulations significantly alter the shape of the airfoil and increase the of the aircraft. Ice accumulations on the aircraft will increase stall and alter the speeds for optimum performance. Flight at high angles (low airspeed) can result in ice buildup on the underside of wings and zontal tail aft of the areas protected by boots or leading edge anti-ice . Trace or light amounts of icing on the horizontal tail can significantly acteristics, which will affect stability and control of the aircraft.

ice protection equipment is not designed to remove ice, snow, or frost tions on a parked airplane sufficiently enough to ensure a safe or subsequent flight. Other means (such as a heated hangar or deicing solutions) must be employed to ensure that all wing, tail, propeller, windshield, static port surfaces and fuel vents are free of ice, frost accumulations, and that there are no internal accumulations of in the control surfaces, engine intakes, brakes, pitot-static system fuel vents prior to takeoff.

PLANES CERTIFIED FOR FLIGHT INTO KNOWN

certified for flight into known icing conditions must have all required equipment installed and fully operational. Certain airplanes ight into known icing equipment package available which, if installed in and completely operational, allows intentional penetration of areas ing conditions as reported in weather sequences or by PIREPS.

This known icing package is designed specifically for the airplane to p adequate in-flight protection during normally encountered icing con produced by moisture-laden clouds. It will not provide total protection severe conditions such as those which exist in areas of freezing rain, no necessarily provide complete protection for continuous operation in extr widespread areas of heavy cloud moisture content. The installed equi should be used to protect the airplane from ice while seeking a di altitude or routing where ice does not exist. During all operations, th must exercise good judgement and be prepared to alter his flight if con exceed the capacity of the ice protection equipment or if any compon this equipment fails.

The airplane's operating handbook will indicate the required equipme intentional flight into known icing conditions. Such equipment may in wing leading edge deice/anti-ice system, vertical and horizontal sta leading edge deice/anti-ice system, propeller deice/anti-ice system, wind anti-ice, heated pitot tube, heated static ports and fuel vents, heated warning vane/transducer or optional angle-of-attack lift sensor van detector light(s), and increased capacity electrical and vacuum systems.

If there is any doubt whether the airplane is certified or has all the re equipment, the pilot should assume that the airplane is not certified fo into known icing and avoid any encounters with areas of icing.

KINDS OF ICING

Airframe icing is a major hazard. It is at its worst when the supercooled below freezing temperature) water droplets are large and plentiful. Drop this type are usually found in cumulus clouds and are the cause of "clear Clear ice is transparent ice deposited in layers, and may be either smo rough. This ice coats more of the wing than "rime ice" because the dr flow back from the leading edge over the upper and lower wing surface b freezing, and the rate of accumulation is higher.

Rime ice is an opaque, granular, and rough deposit of ice that is u encountered in stratus clouds. Small supercooled droplets freeze in when struck by the leading edges of the airplane. Rime ice can c change the drag characteristics of the airplane. Under some conditio large "double horn" buildup on the leading edges can occur which dra alters the airfoil shape. Altitude changes usually work well as an avoi strategy for rime ice. In colder temperatures, these types of superc water droplets quickly convert to ice crystals.

Icing in precipitation comes from freezing rain or drizzle which falls warmer air aloft to colder air below. This results in a very rapid build clear ice, and must be avoided by all means available to the pilot.

snowing, the problem is not so much the snow sticking to the airplane as ing caused by the supercooled water droplets in the clouds from which now is falling. The amount of ice will depend upon cloud saturation.

should report all icing conditions to ATC/FSS, and if operating under IFR itions, request new routing or altitude if icing will be a hazard. Be sure to type of airplane when reporting icing.
llowing describe how to report icing conditions:

- **Trace** - Ice becomes visible. Rate of accumulation is slightly greater than the rate of sublimation. Anti-ice equipment must be on and deice equipment may or may not be required.
- **Light** - The rate of accumulation may create a problem if flight is prolonged in this environment (over 1 hour). Occasional use of deicing equipment and continuous use of anti-icing equipment removes/prevents accumulation.
- **Moderate** - The rate of accumulation is such that even short encounters become potentially hazardous and use of deicing/anti-icing equipment and flight diversion is necessary.
- **Severe** - The rate of accumulation is such that deicing/anti-icing equipment fails to reduce or control the hazard. Immediate flight diversion is necessary.

SULTS OF ICING

performance can be severely reduced by ice accumulation. ation of 1/2 inch of ice on the leading edges of the wings and age can cause a large loss in rate of climb, a cruise speed reduction to 30 KIAS, as well as a significant buffet and stall speed increase. Even airplane is certified for flight into known icing and the equipment is properly, ice remaining on unprotected areas of the airplane can large performance losses. With one inch of residual ice accumulation, stalls can double, or even triple. Ice accumulation also will increase weight.

ADVERTENT ICING ENCOUNTER

icing conditions is not recommended. However, an inadvertent with these conditions is possible. The following are things to during if inadvertent icing is experienced. These items are not to replace procedures described in any operating handbook. Instead, has been generated to familiarize pilots of older model Cessnas with they can use in the event of an inadvertent icing condition. The procedure is a change of altitude, or course reversal to escape the icing

1. Turn pitot heat, stall warning heat, propeller deice/anti-ice windshield anti-ice switches ON (if installed).
2. Change altitude (usually climb) or turn back to obtain an outs temperature that is less conducive to icing.
3. Increase power as necessary to maintain cruise airspeed a minimize ice accumulation. Maintain a minimum indicated airsp V_Y + 10 KIAS until assured that all ice is off the airframe.
4. Turn cabin heat and defroster controls full on and open defrost to obtain maximum windshield defroster effectiveness.
5. Increase engine speed to minimize ice buildup on propeller blad excessive vibration is noted, momentarily reduce engine spee the propeller control, and then rapidly move the control full fo Cycling the RPM flexes the propeller blades and high RPM incr centrifugal force, causing ice to shed more readily.
6. Watch for signs of induction air filter ice. Regain manifold press increasing the throttle setting and/or selecting alternate carburetor heat. If ice accumulates on the intake filter (re alternate air), a decrease of manifold pressure will be experie and the mixture should be adjusted as required.
7. If icing conditions are unavoidable, plan a landing at the n airport. In the event of an extremely rapid ice buildup, se suitable "off airport" landing site.
8. Ice accumulation of 1/4 inch or more on the wing leading edge require significantly higher power and a higher approach and l speed, and result in a higher stall speed and longer landing roll.
9. If practical, open the window and, scrape ice from a portion windshield for visibility in the landing approach.
10. Approach with reduced flap extension to ensure adequate el effectiveness in the approach and landing.
11. Avoid a slow and high flare-out.
12. Missed approaches should be avoided whenever possible, beca severely reduced climb capability. However, if a go-arou mandatory, make the decision much earlier in the approach normal. Apply maximum power while retracting the flaps slo small increments (if extended). Retract the landing gear immediate obstacles are cleared.

EATHER

RTNESS

pilots pay particularly close attention to the business of flying when they ntionally operating in instrument weather conditions. On the other unlimited visibility tends to encourage a sense of security which may not fied. The pilot should be alert to the potential of weather hazards, and ed if these hazards are encountered on every flight.

R JUDGMENT

ed distance from clouds and visability regulations establish the ns for VFR flight. The pilot who uses even greater margins exercises judgment. VFR operation in class D airspace, when the official visibility miles or greater, is not prohibited, but good judgment would dictate that pilots keep out of the approach area under marginal conditions.

ation reduces forward visibility. Although it is perfectly legal to cancel IFR flight plan whenever the pilot feels he can proceed VFR, it is usually a practice to continue IFR into a terminal area until the destination airport is

conducting simulated instrument flights, pilots should ensure that the provides adequate visibility to the safety pilot. Greater visibility is when flying in or near a busy airway or close to an airport.

R JUDGMENT

following tips are not necessarily based on Federal Aviation Regulations, considered as recommendations for pilot consideration. They do, however, those elements of IFR flight that are common causes of accidents.

1. All pilots should have an annual IFR proficiency check, regardless of IFR hours flown.
2. For the first 25 hours of pilot-in-command time in airplane type, increase ILS visibility minimums and raise nonprecision approach minimums.
3. An operating autopilot or wing leveler is strongly recommended for single pilot IFR operations.
4. Do not depart on an IFR flight without an independent power source for attitude and heading systems, and an emergency power source for

at least one VHF communications radio, or a ha
communications radio.

5. Be sure the airplane has enough fuel to fly to the destination
headwind calculated at 125 percent of the forecast wind,
tailwind calculated at 75 percent of forecast wind. Also,
enough fuel to miss the approach at the destination airport, c
cruise altitude and fly an approach at an alternate airport, p
minutes of fuel for low altitude holding.
6. The IFR takeoff runway should meet the criteria of the acc
stop/go distances for that particular twin-engine airplane,
percent of the distance to clear a 50-foot obstacle for a single.
7. Do not enter an area of embedded thunderstorms without o
weather detection equipment (radar and/or Stormscope$_{TM}$) and
cloud bases are at least 2000 feet above the highest terrain, te
essentially level, and VFR can be maintained. Avoid all cells
miles, and severe storms by 20 miles.
8. Do not enter possible icing conditions unless all deice and
systems are fully operational, or the weather provides at least
foot ceiling and three miles visibility for the entire route ov
terrain, and the surface temperatures are greater than 5°C.
9. Adhere to weather minimums, missed approach procedur
requirements for visual contact with the runway environment.
approach is missed, with the runway not in sight at the appr
time because of weather conditions, do not attempt another ap
unless there is a valid reason to believe there has been a sub
improvement in the weather.
10. Observe the minimum runway requirement for an IFR landing
minimum IFR runway length for propeller driven airplanes sh
considered 200 percent of maximum landing distance. Increas
distances 90 percent for a wet runway and 150 percent for ice
runway.
11. Make a missed approach if speed and configuration are not
inside the middle marker or on nonprecision final, or if the tou
aiming point will be missed by more than 1000 feet. If an appr
missed because of pilot technique, evaluate the reasons and
before attempting another approach.
12. Use supplemental oxygen above a cabin altitude of 5000 feet
and above 10,000 feet during the day.

WIND

The keys to successfully counteracting the effects of wind are prof
understanding the wind response characteristics of the airplane,
thoughtful approach to the operation. Some operating handbooks ind
maximum demonstrated crosswind velocity, but this value is not consid
be limiting. There is an ultimate limit on wind for safe operation, which
with the airplane and pilot. The lighter the airplane and the lower the
speed, the less wind it will take to exceed this limit. The way an airplan

landing gear affects handling characteristics. If it sits nose down, the
will be unloaded and the airplane will handle better in wind than an
e which sits in a nose up attitude, creating a positive angle of attack.
e latter type, the full weight of the airplane cannot be on the wheels as
plane is facing into the wind. Airplanes with these characteristics cause
to work harder to keep the airplane under control.

OSSWIND

an airplane is moving on the ground, it is affected by the direction and
y of the wind. When taxiing into the wind, the control effectiveness is
ased by the speed of the wind. The tendency of an airplane to
eervane is the greatest while taxiing directly crosswind, which makes this
ewhat difficult. When taxiing in crosswind, speed and use of brakes should
ed to a minimum and all controls should be utilized to maintain directional
l and balance (see Crosswind Taxi Diagram, Figure 1).

offs into strong crosswinds are normally performed with the minimum flap
necessary for the field length. With the ailerons deflected into the wind,
plane should be accelerated to a speed slightly higher than normal (on
engine airplanes, additional power may be carried on the upwind engine
the rudder becomes effective), and then the airplane should be flown off
ly to prevent possible settling back to the runway while drifting. When
the ground and any obstacle, the pilot should execute a coordinated
the wind to correct for drift. The pilot's ability to handle a crosswind is
dependent upon pilot proficiency than airplane limitations.

crosswind approach and landing may be performed using either the wing-
, or combination drift correction technique, depending upon the
experience, and desires of the pilot. Use of the minimum flap setting
the field length is recommended . Whichever method is used, the
should hold a straight course after touchdown with the steerable nose or
and occasional differential braking, if necessary.

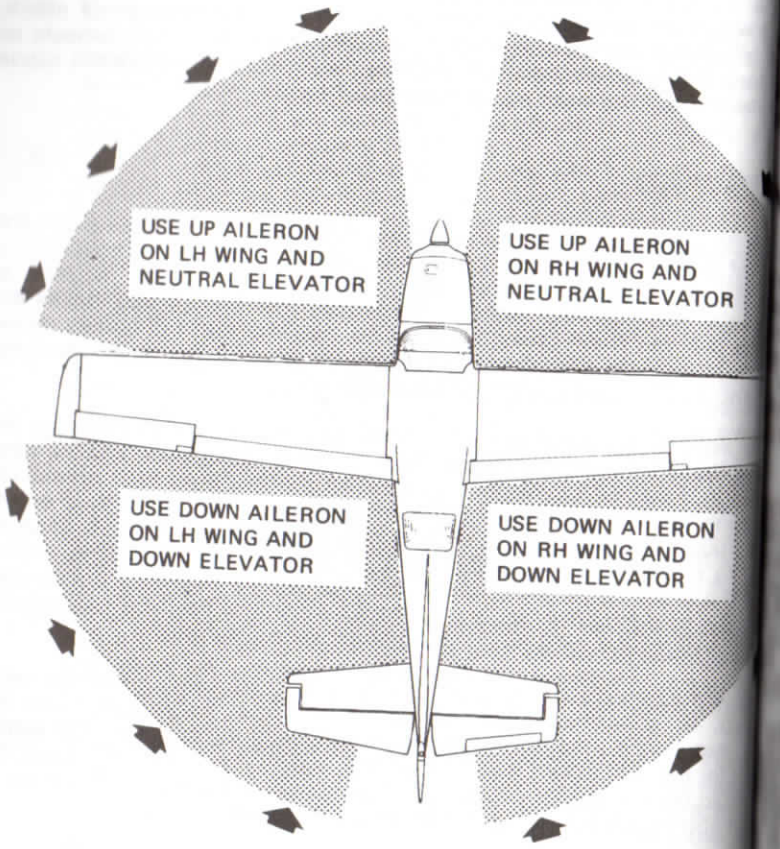

CODE

WIND DIRECTION ➡

NOTE

Strong quartering tail winds r
caution. Avoid sudden bursts
throttle and sharp braking wh
airplane is in this attitude. U
steerable nose or tail wheel and ru
maintain direction.

Figure 1. Crosswind Taxi Diagram

ise airplanes with a steerable tailwheel, landings may be made with the
el lock (if installed) engaged or disengaged. Although the use of the
s left to the individual pilot's preference, it should be used during strong
ind landings on rough fields with a heavily loaded airplane. If the lock
disengaged, this condition could lead to a touchdown with a deflected
eel and subsequent external forces on the tailwheel that are conducive to
y.

W LEVEL WIND SHEAR

evel wind shear is the interflow of air masses near the ground, having
d speeds and directions. As an airplane passes through the narrow
ary between the two air masses, large fluctuations in airspeed may be
ered depending on the difference in speed and direction of the air
s. Low level wind shear can be experienced through both the horizontal
tical plane. One major risk with a wind shear encounter is that a
loss of airspeed may render the airplane out of control near the
d. Recovery depends on altitude and the magnitude of the airspeed

d shear encounter can be reported as either positive or negative. A
d shear is one in which the headwind component suddenly
s. The airplane's inertia makes it tend to maintain the same velocity
space, not through air, so the first thing a pilot is likely to notice is an
in airspeed. The opposite case, a negative wind shear, is a sudden
in headwind component. The airplane will begin to sink immediately,
decreased by the reduced airspeed; and as the natural aerodynamics,
the pilot, lowers the nose, the descent rate increases.

cts of wind shear on smaller airplanes are sometimes less severe than
r jetliners. Smaller airplanes have less mass (and therefore less
) and their speed can change more quickly. Thus, a smaller airplane
s to its trimmed speed, after encountering a wind shear, more rapidly
larger, heavier one.

ER OF WIND SHEAR CONDITIONS

r is encountered in several distinct weather scenarios. Within a
as one air mass overtakes another, variations in wind speed and
can be significant. Fast moving cold fronts, squall lines, and gust
s the highest risk.

inversion can present a fast moving air mass directly above a
cool layer at the surface. Under these conditions an airplane on
a headwind aloft will experience a rapid loss of airspeed during
through the boundary layer to the calm air beneath.

The most violent type of wind shear is that induced by convective activ thunderstorms. Downdrafts created by local areas of descending air (ro to 20 miles diameter) can exceed 700 feet per minute. At times, ver areas of descending air (1 mile or so in diameter), called microburs reach vertical speeds of 6000 feet per minute or more. Such dow generate significant turbulence and exceed the climb capability of airplanes. In addition, as the downdraft/microburst reaches the ground, spreads in all directions. The pilot entering the area at relatively low will likely experience an increase in airspeed followed by a dramatic de in airspeed and altitude while exiting the area.

INDICATIONS OF WIND SHEAR

The winds near or around the base of a thunderstorm are unpredictable, but there are identifiable signs that may indicate that wind conditions exist. Small areas of rainfall, or shafts of heavy rain are c possible wind shear conditions. Virga, or rain shafts that evaporate reaching the ground, may indicate cool, dense air sinking rapidly an contain microburst winds. On the ground, such signs as trees bending wind, ripples on water, or a line of dust clouds should alert the pilot.

With the presence of a strong temperature inversion, if low clouds are rapidly but winds are calm or from a different direction on the surface, a wind shear zone might exist and the pilot may elect to use a higher speed until crossing the zone. Conversely, while in the landing pattern an approach, if the reported surface winds are significantly different th being experienced in flight, it must be taken as a warning to the pote wind shear.

A pilot who has been holding a wind correction angle on final approac suddenly finds that a change has to be made – i.e., the runway (or CDI starts moving off to the side – most likely encountered wind shear. The techniques apply, such as an appropriate heading change, but importantly, the pilot has been alerted to the presence of a wind shear s and should be ready to deal with a more serious headwind to tailwind s any time.

COPING WITH WIND SHEAR

A pilot can cope with wind shear by maintaining a somewhat higher a not to exceed V_A (maneuvering speed), since the conditions conducive shear are also often conducive to turbulence. Pilots should be a negative wind shear; if the airspeed is suddenly decreasing, the sin increasing, or more than usual approach power is required, a negative shear may well have been encountered. Also, the closer the airplane

ound, the smaller the margin for sink recovery. Be prepared to go at the first indication of a negative wind shear. A positive wind shear followed immediately by a negative shear.

larger airports are equipped with a low-level wind shear alerting system AS). Many have ATIS, and or AWOS wind information. All elements of eather conditions including pilot reports should be carefully considered ny pilot who experiences wind shear should warn others.

mary, all pilots should remain alert to the possibility of low level wind If wind shear is encountered on final approach, usually characterized ific airspeed and altimeter indications and almost always associated with manded airplane attitude changes, do not hesitate to go around. If the ach profile and airspeed cannot be reestablished, it cannot be ssed too strongly that a go-around is often the pilot's best course of and the earlier the decision to go around, the better the chance of ery.

UNDERSTORM AVOIDANCE

has been written about thunderstorms. They have been studied for and while considerable information has been learned, the studies because questions still remain. Knowledge and weather radar have ed our attitudes toward thunderstorms. But any storm recognizable as a erstorm should be considered hazardous. Never regard any storm lightly, even when radar observers report the echoes are of light ity. Avoiding all thunderstorms is the best policy.

llowing are some do's and don'ts of thunderstorm avoidance:

1. Don't land or takeoff in the face of an approaching thunderstorm. A sudden gust front of low level turbulence (wind shear) could cause loss of control.
2. Don't attempt to fly under a thunderstorm, even if you can see through to the other side. Turbulence and wind shear under the storm is likely and hazardous.
3. Don't fly near clouds containing embedded thunderstorms. Scattered thunderstorms that are not embedded usually can be visually circumnavigated.
4. Don't trust the visual appearance to be a reliable indicator of the turbulence inside a thunderstorm.
5. Do avoid, by at least 20 miles, any thunderstorm identified as severe or giving an intense radar echo. This is especially true under the anvil of a large cumulonimbus.
6. Do circumnavigate the entire area if the area has 6/10 thunderstorm coverage.
7. Do remember that vivid and frequent lightning indicates the probability of a severe thunderstorm.

8. Do regard, as extremely hazardous, any thunderstorm w 35,000 feet or higher, whether the top is visually sig determined by radar.
9. Do check the convective outlook during weather briefings.

The following are some do's and don'ts during inadvertent thunderst penetration:

1. Do keep your eyes on the instruments. Looking outside the c increase the danger of temporary blindness from lightning.
2. Don't change power settings; maintain settings for the recom turbulent air penetration speed.
3. Do maintain a generally constant attitude.
4. Don't attempt to maintain altitude. Maneuvers made in atte maintain an exact altitude increase the stress on the airplane.
5. Exit the storm as soon as possible.

A pilot on an IFR flight plan must not deviate from an approved altitude without proper clearance, as this may place him in conflict w air traffic. Strict adherence to traffic clearance is necessary to a adequate level of safety.

Always remember, all thunderstorms are potentially hazardous and th best advised to avoid them whenever possible.

FROM WARM WEATHER TO COLD WEATHER

Flying from warm weather to cold weather can do unusual things to a To cope with this problem, pilots must be alerted to a few preparation airplane is serviced with a heavier grade of oil, such as SAE 50, the oi be changed to a lighter grade such as SAE 30 before flying into v weather. If use of a multi-viscosity oil is approved, it is recommen improved starting in cold weather. Refer to the airplane operating hand maintenance manual for approved oils. An engine/airplane winteriz may be available for the airplane. It usually contains restrictive covers cowl nose cap and/or oil cooler and engine crankcase breather for very cold weather. Proper preflight draining of the fuel system from a is especially important and will help eliminate any free water accum The use of fuel additives, such as Prist or EGME, may also be d Refer to the airplane operating handbook or maintenance manual for a fuel additives.

In order to prevent propeller freeze-up when operating in very cold we may be necessary to exercise the constant speed prop every few m This can be accomplished by moving the prop controls forward or a their cruise position 300 RPM and back during flight.

SNOW, FROST, Etc.

y extended time, it is always best to park an airplane in a hangar, arly during inclement weather. When this is not possible, all ice, snow, etc., must be removed from the entire airframe and engine(s) prior to g.

esence of ice, snow, frost, etc., on the wings, tail, control surfaces ally and internally), etc., is hazardous. Safe operation depends upon emoval. Too often, their effects on airplane performance are not tely understood or appreciated.

KE TURBULENCE

es are significantly affected by the wake turbulence of any heavier or helicopter. Wake turbulence dissipation and displacement are of elapsed time and prevailing wind speed and direction. During conditions, severe turbulence generated by large aircraft can persist as 10 minutes. Delay takeoff to ensure dissipation and displacement of distance. When it is necessary to take off behind a heavier aircraft or avoid wake turbulence, particularly wake vortices, by vertical or ing or an appropriate time delay.

distance is appropriate to longer runways where operations can be on portions of the runway not affected by the vortices of preceding and flying above areas where vortices will be present is possible. become well before the preceding aircraft rotation point and climb flight path, or lift off beyond the touchdown point of a landing aircraft. is necessary to land behind another aircraft, remain above its path and land beyond its touchdown point. Touchdown prior to the point of a departing aircraft.

movement of wake vortices is only possible when a significant exists and is not detectable unless exhaust smoke or dust marks Consider offsetting the takeoff path to the upwind side of the g.

RESTRAINT SYSTEMS

SEAT RESTRAINTS

Records of general aviation airplane accident injuries reveal a surprising number of instances in which the occupants were not properly using the available restraint system, indicating the presence of a complacent attitude during airplane preflight briefing inspections. An unbuckled restraint system during a critical phase of flight, such as during turbulence, could cause loss of control of the airplane and/or injuries. Although the ultimate responsibility lies with the pilot-in-command, each user of a restraint system should be cognizant of the importance of proper use of the complete restraint system.

Pilots should ensure that all occupants properly use their individual restraint systems. The system should be adjusted snug across the body. A loose restraint belt will allow the wearer excessive movement and could result in serious injuries. The wearer should not allow sharp or hard items in pockets or other clothing to remain between their body and the restraint system to avoid discomfort or injury during adverse flight conditions or accidents. Each occupant must have their own restraint system. Use of a single system by more than one person could result in serious injury.

Occupants of adjustable seats should position and lock their seats before fastening their restraint system. Restraint belts can be lengthened before use by grasping the sides of the link on the link half of the belt and pulling against the belt. Then, after locking the belt link into the belt buckle, the belt can be tightened by pulling the free end. The belt is released by pulling upward on the top of the buckle. Restraint systems must be fastened anytime the airplane is in motion. Before takeoff, the pilot should brief all passengers on the proper use, including the method of unlatching the entire restraint system, in the event that emergency egress from the airplane is necessary.

Small children must be secured in an approved child restraint system as defined in FAR 91.107 “Use of safety belts, shoulder harnesses, and child restraint systems”. The pilot should know and follow the instructions for installation and use provided by the seat manufacturer. The child restraint system should be installed in an aircraft seat other than a front seat. If the child restraint system is installed in a front seat, the pilot must ensure that it does not interfere with full control movement or restrict access to any aircraft controls. Also, the pilot should consider whether the child restraint system could interfere with emergency egress. Refer to AC 91-62A, "Use of Child Seats In Aircraft" for more information.

If shoulder restraints are not installed, kits are available from Cessna or from other approved sources. Cessna strongly recommends the installation of shoulder harnesses.

SEAT STOPS/LATCHES

The pilot should visually check the seat for security on the seat tracks and assure that the seat is locked in position. This can be accomplished by visually ascertaining pin engagement and physically attempting to move the seat fore and aft to verify the seat is secured in position. Failure to ensure that the seat is locked in position could result in the seat sliding aft during a critical phase of flight, such as initial climb. Mandatory Service Bulletin SEB89-32 installs secondary seat stops and is available from Cessna.

The pilot's seat should be adjusted and locked in a position to allow full rudder deflection and brake application without having to shift position in the seat. For takeoff and landing, passenger seat backs should be adjusted to the most upright position.

SECURITY IN AFT-FACING SEATS

Some aft-facing seats are adjustable fore and aft, within the limits of the seat stops. Ensure the seat stop pins are engaged with the holes in the seat tracks before takeoff and landing. The restraint system should be worn anytime the seat is occupied. Assure that the seats are installed in the correct positions. Approved seat designs differ between forward-facing and rear-facing seats and proper occupant protection is dependent upon proper seat installation.

FUEL SYSTEM CONTAMINATION

ADEQUATE PREFLIGHT OF THE FUEL SYSTEM

A full preflight inspection is recommended before each flight for gen aviation airplanes. Inspection procedures for the fuel system must incl checking the quantity of fuel with the airplane on level ground, checking security of fuel filler caps and draining the fuel tank sumps, fuel reservoi fuel line drain(s), fuel selector drains, and fuel strainer(s). To ensure that unsampled fuel remains in the airplane, an adequate sample of fuel from fuel strainer must be taken with the fuel selector valve placed in each o positions (BOTH, LEFT, RIGHT, etc.). Some Cessna airplanes are equip with a fuel reservoir(s). If so equipped, the pilot should be aware of location of the fuel reservoir(s) and its drain plug or quick-drain. The reservoir(s) on most single-engine airplanes is located near the fuel syst low point where water will accumulate. Therefore, the fuel reservoir(s) must drained routinely during each preflight inspection. Periodically check condition of the fuel filler cap seals, pawls, and springs for evidence of w and/or deterioration which indicates a need for replacement. Check fuel adapters and seals to insure that the sealing surfaces are clean and not rus or pitted. Deformed pawls may affect the sealing capabilities of the se and/or cause it to be exposed to detrimental weather elements. Precauti should be taken to prevent water entry into fuel tanks, due to damaged f caps and every effort made to check and remove all water throughout the system. Umbrella caps will assist in preventing water entry into the fuel t through the fuel filler.

It is the pilot's responsibility to ensure that the airplane is properly servi before each flight with the correct type of fuel. The pilot must take the time inspect the airplane thoroughly, making sure all of the fuel filler caps installed and secured properly after visually checking the fuel quantity with airplane on level ground. During the check of the fuel tanks, observe the c and odor of the fuel while draining a generous sample from each sump drain point into a transparent container. Check for the presence of water, rust, or other contaminants. Never save the fuel sample and risk the possib of contaminating the system. Also, ensure that each fuel tank vent is clea restrictions (i.e., dirt, insect nests, ice, snow, bent or pinched tubes, et Refer to the airplanes Maintenance Manual for for fuel tank vent removal inspection if needed.

PROPER SAMPLING FROM QUICK DRAINS

The fuel system sumps and drains should always be drained and checked for contaminants after each refueling and during each preflight inspection. Drain at least a cupful of fuel into a clear container to check for solid and/or liquid contaminants, and proper fuel grade. If contamination is observed, take further samples at all fuel drain points until fuel is clear of contaminants; then, gently rock wings and, if possible, lower the tail to move any additional contaminants to the sampling points. Take repeated samples from all fuel drain points until all contamination has been removed. If excessive sampling is required, completely defuel, drain and clean the airplane fuel system, and attempt to discover where or how the contamination originated before the airplane flies again. Do not fly the airplane with contaminated or unapproved fuel. If an improper fuel type is detected, the mandatory procedure is to completely defuel and drain the fuel system.

Extra effort is needed for a proper preflight of all fuel drains on a float plane. If water is detected after rocking the wings and lowering the tail, the aircraft should not be flown until after the fuel system is completely drained and cleaned.

80 versus 100 OCTANE FUEL

When 80 octane (red) fuel began to be replaced by 100LL (blue) there was concern about the service life expectancy of low compression engines. It was claimed that some engines experienced accelerated exhaust valve erosion and valve guide wear from the use of highly leaded 100/130 (green) avgas in engines that were rated to use a minimum grade of 80 octane fuel. Engine manufacturers have provided amended operating procedures and maintenance schedules to minimize problems resulting from the use of high lead 100/130 avgas. Experience has now proven that low-compression aircraft engines can be operated safely on 100LL avgas providing they are regularly operated and serviced in accordance with the operating handbook or other officially approved document.

AVGAS versus JET FUEL

Occasionally, airplanes are inadvertently serviced with the wrong type of fuel. Piston engines may run briefly on jet fuel, but detonation and overheating will soon cause power failure. All piston-engine airplanes should have fuel filler restrictors installed to prevent jet fuel from being pumped into the fuel tanks. An engine failure caused by running a turbine engine on the wrong fuel may not be as sudden, but prolonged operation on avgas will severely damage the engine because of the lead content and differing combustion temperature of the fuel. Time limitations for use of avgas in turbine engines are listed in the operating handbook.

AUTOMOTIVE GASOLINE/FUEL

Never use automotive gasoline in an airplane unless the engine and airplane fuel system are specifically certified and approved for automotive gasoline use. The additives used in the production of automotive gasoline vary widely throughout the petroleum industry and may have deteriorating effects on airplane fuel system components. The qualities of automotive gasoline can induce vapor lock, increase the probability of carburetor icing, and can cause internal engine problems.

FUEL CAP SECURITY

The consequence of a missing or incorrectly installed fuel filler cap is inflight fuel siphoning. Inflight siphoning may distort the fuel cell on some airplanes with bladder-type fuel cells. This distortion will change the fuel cell capacity, and may interfere with the operation of the fuel quantity indicator sensing mechanism inside the cell. This condition will generally cause an erroneous and misleading fuel quantity reading and may result in incomplete filling for the next flight.

CONTAMINATION

Solid contamination may consist of rust, sand, pebbles, dirt, microbes or bacterial growth. If any solid contaminants are found in any part of the fuel system, drain and clean the airplane fuel system. Do not fly the airplane with fuel contaminated with solid material.

Liquid contamination is usually water, improper fuel type, fuel grade, or additives that are not compatible with the fuel or fuel system components. Liquid contamination should be addressed as set forth in the section entitled "Proper Sampling from Quick Drains", and as prescribed in the airplane's approved flight manual.

FUEL PUMP OPERATION

AUXILIARY FUEL PUMP OPERATION - GENERAL

The engine-driven fuel pump is designed to supply an engine with a steady, uninterrupted flow of fuel. Temperature changes, pressure changes, agitation in the fuel lines, fuel quality, and other factors can cause a release of vapor in the fuel system. Some airplanes (single and multi-engine) incorporate an auxiliary fuel pump to reduce excess fuel vapor in the fuel supply for each engine. This pump is also used to ensure that a positive supply of fuel is available in the event the engine driven fuel pump should fail.

FUEL VAPOR

Under hot, high altitude conditions, or in situations during a climb that are conducive to fuel vapor formation, it may be necessary to utilize the auxiliary fuel pump(s) to attain or stabilize the fuel flow required for proper engine operation. Use the auxiliary fuel pump(s) in all conditions where there is any possibility of excessive fuel vapor formation or temporary disruption of fuel flow in accordance with operating handbook procedures.

SINGLE ENGINE FUEL PUMP OPERATION (CARBURETED ENGINE)

On some carbureted, high wing, single engine airplanes, the auxiliary fuel pump should be turned on anytime the indicated fuel pressure falls below the minimum. Typically this would only occur in an extreme climb attitude following failure of the engine driven fuel pump. Consult the operating handbook of the affected model for a detailed description of the procedure.

SINGLE ENGINE FUEL PUMP OPERATION (PRECISION/BENDIX FUEL INJECTED ENGINE)

The auxiliary fuel pump is used primarily for priming the engine before starting. Priming is accomplished through the regular injection system. If the auxiliary fuel pump switch is placed in the ON position for prolonged periods with the master switch turned on, the mixture rich, and the engine stopped, the intake manifolds will become flooded.

The auxiliary fuel pump is also used for vapor suppression in hot weather. Normally, momentary use will be sufficient for vapor suppression. Turning on the auxiliary fuel pump with a normally operating engine pump will result in enrichment of the mixture. The auxiliary fuel pump should not be operated during takeoff and landing, since gravity and the engine driven fuel pump will supply adequate fuel flow to the fuel injector unit. In the event of failure of the engine driven fuel pump, use of the auxiliary fuel pump will provide sufficient fuel to maintain flight at maximum continuous power.

To ensure a prompt engine restart after running a fuel tank dry, switch the fuel selector to the opposite tank at the first indication of fuel flow fluctuation or power loss. Turn on the auxiliary fuel pump and advance the mixture control to full rich. After power and steady fuel flow are restored, turn off the auxiliary fuel pump and lean the mixture as necessary.

SINGLE ENGINE FUEL PUMP OPERATION (TCM FUEL INJECTED ENGINE)

The auxiliary fuel pump on single engine airplanes is controlled by a split rocker type switch labeled AUX PUMP. One side of the switch is red and is labeled HI; the other side is yellow and is labeled LO.

The LO side operates the pump at low speed, and, if desired, can be used for starting or vapor suppression. The HI side operates the pump at high speed, supplying sufficient fuel flow to maintain adequate power in the event of an engine driven fuel pump failure. In addition, the HI side may be used for normal engine starts, vapor elimination in flight, and inflight engine starts.

When the engine driven fuel pump is functioning and the auxiliary fuel pump is placed in the HI position, a fuel/air ratio considerably richer than best power is produced unless the mixture is leaned. Therefore, the auxiliary fuel pump must be turned off during takeoff or landing, and during all other normal flight conditions. With the engine stopped and the battery switch on, the cylinder intake ports can become flooded if the HI or LO side of the auxiliary fuel pump switch is turned on.

In hot, high altitude conditions, or climb conditions that are conducive to fuel vapor formation, it may be necessary to utilize the auxiliary fuel pump to attain or stabilize the fuel flow required for the type of climb being performed. Select either the HI or LO position of the switch as required, and adjust the mixture to the desired fuel flow. If fluctuating fuel flow (greater than 5 lbs/hr) is observed, place the auxiliary fuel pump switch in the HI or LO position as required to clear the fuel system of vapor. The auxiliary fuel pump may be operated continuously in cruise, if necessary, but should be turned off prior to descent. Each time the auxiliary fuel pump switch is turned on or off, the mixture should be readjusted.

MULTI-ENGINE FUEL PUMP OPERATION

Cessna multi-engine, low wing airplanes utilize engine driven fuel pumps to assist the continuous flow of fuel to the engine. As a general rule, the auxiliary fuel pumps should be utilized under the following conditions:

1. Every takeoff.
2. Initial climb after takeoff (unless the operating handbook indicates that it is not necessary).
3. When switching the fuel selector(s) from one tank to another.
4. Every approach and landing.
5. Anytime the fuel pressure is fluctuating and the engine is affected by the fluctuation.
6. During hot weather, such as hot engine ground operation where fuel vapor problems cause erratic engine operation.
7. High altitude. (For auxiliary fuel pump operation at high altitude consult the operating handbook.)
8. If the engine driven fuel pump should fail.
9. On some twins when using the auxiliary fuel tanks.

If the auxiliary fuel pump is used during ground operations, such as hot day engine starts or purging fuel vapor, pilots should check the condition of the engine driven fuel pump before takeoff by turning the auxiliary fuel pump OFF briefly, and then back ON for takeoff. If the engine driven fuel pump has failed, the engine will not continue to operate.

If the battery or master switch is on while an engine is stopped on the ground or in flight, the cylinder intake ports can become flooded if the auxiliary fuel pump is turned on. If this situation occurs in excess of 60 seconds, the cylinders must be purged as follows:

1. With the auxiliary fuel pump OFF, allow the induction manifold to drain at least five minutes or until fuel ceases to flow from the drains on the bottom of the engine.
2. If natural draining has occurred, ensure that the auxiliary fuel pump is OFF, the magnetos or ignition switch is OFF, the mixture is in IDLE CUT-OFF, and the throttle is FULL OPEN, then turn the engine with the starter .
3. If natural draining has not occurred, perform maintenance as required.

A mandatory service bulletin (MEB88-3) was issued to replace the automatic fuel pressure sensing and the cockpit auxiliary fuel pump switches for each engine with three-position lever lock type toggle switches. These modifications provide direct pilot activation of the auxiliary fuel pumps.

On low wing multi-engine airplanes (except model 310, 310A, and 310B, which are not affected by this change), the switches are labeled AUX PUMP, L (left engine) and R (right engine) and switch positions are labeled LOW, OFF, and HIGH. The LOW position operates the auxiliary fuel pumps at low pressure

and can be used, when required, to provide supplementary fuel pressure for all normal operations. The switches are OFF in the middle position. The HIGH position is reserved for emergency operation, and operates the pumps at high pressure. The switches are locked out of the HIGH position and the switch toggle must be pulled to clear the lock before it can be moved to the HIGH setting. The toggle need not be pulled to return the switch to OFF.

The LOW position of the auxiliary fuel pump switches should be used whenever an original manual/handbook or checklist procedure specifies either LOW (PRIME, in 310C, 310D, 310F, 310G, 310H, 320, and 320A.) or ON. The LOW position is also used anytime there are indications of vapor, as evidenced by fluctuating fuel flow. Auxiliary fuel pumps, if needed, are to be operated on LOW in all conditions except when an engine driven fuel pump fails.

The HIGH position supplies sufficient fuel flow to sustain partial engine power and should be used solely to sustain the operation of an engine in the event its engine driven fuel pump fails. Failure of an engine driven fuel pump will be evidenced by a sudden reduction in the fuel flow indication immediately prior to a loss of power while operating from a fuel tank containing adequate fuel. In an emergency, where loss of an engine driven fuel pump is involved, pull the applicable auxiliary fuel pump switch to clear the lock and select the HIGH position. Then adjust the throttle and mixture controls to obtain satisfactory operation. At high manifold pressure and RPM, auxiliary fuel pump output may not be sufficient for normal engine operation. In this case, reduce manifold pressure to a level compatible with the indicated fuel flow. At low power settings, the mixture may have to be leaned for smooth engine operation. If HIGH auxiliary pump output does not restore adequate fuel flow, a fuel leak may exist. The auxiliary pump should be shut off and the engine secured.

If the auxiliary fuel pump switches are placed in the HIGH position with the engine-driven fuel pump(s) operating normally, total loss of engine power may occur due to flooding.

When performing single engine operations, the auxiliary fuel pump of the engine to be shutdown should be turned OFF prior to any intentional engine shutdown, to preclude fuel accumulation in the engine intake system.

In models 310, 310A, and 310B, which are equipped with pressure type carburetors, the electric fuel boost pumps in the tanks provide a positive fuel flow as emergency pumps in the event of failure of the engine driven fuel pumps. They also provide fuel pressure for priming and starting. The boost pumps are operated by two electric switches, and the up position is ON. Always take off and land with these pumps turned ON. Anytime the boost pumps are turned on without the engines running, mixture controls must be in the idle cut-off position to prevent flooding the intake manifolds.

CENTERLINE THRUST TWINS (FUEL PUMP OPERATION)

The auxiliary fuel pumps on the centerline thrust models (336 and 337 Skymaster) are controlled by two split rocker type switches. The switches are labeled AUX PUMPS and F ENGINE R. One side of each switch is red and is labeled HI. The other side is yellow and is labeled LO. The LO side operates the pumps at low speed, and if desired, can be used for starting or vapor suppression. The HI side operates the pumps at high speed, supplying sufficient fuel flow to maintain adequate power in the event of an engine driven fuel pump failure. In addition, the HI side may be used for normal engine starts, vapor elimination in flight, and inflight engine starts.

When the engine driven fuel pump is functioning and the auxiliary fuel pump is placed in the HI position, a fuel/air ratio considerably richer than best power is produced unless the mixture is leaned. Therefore, these switches must be turned OFF during takeoff or landing, and during all other normal flight conditions. With the engine stopped and the battery switch ON, the cylinder intake ports can become flooded if the HI or LO side of the auxiliary fuel pump switch is turned on.

In hot, high altitude conditions, or climb conditions that are conducive to fuel vapor formation, it may be necessary to utilize the auxiliary fuel pumps to attain or stabilize the fuel flow required for the type of climb being performed. Select either the HI or LO position of the switches as required, and adjust the mixtures to the desired fuel flow. If fluctuating fuel flow (greater than 5 lbs/hr) is observed, place the appropriate auxiliary fuel pump switch in the HI or LO position as required to clear the fuel system of vapor. The auxiliary fuel pump may be operated continuously in cruise, if necessary, but should be turned off prior to descent. Each time the auxiliary fuel pump switches are turned on or off, the mixtures should be readjusted.

AUXILIARY FUEL TANKS

Many twin engine Cessna airplanes incorporate auxiliary fuel tanks to increase range and endurance. These tanks are usually bladder type cells located symmetrically in the outboard wing areas and contain no internal fuel pumps. When selected, the fuel from these tanks is routed to the engine driven fuel pump.

If the auxiliary fuel tanks are to be used, the pilot must first select main tank (tip tank) fuel for at least 60 minutes of flight (with use of 40-gallon auxiliary fuel tanks) or 90 minutes of flight (with use of 63-gallon auxiliary fuel tanks). This is necessary to provide space in the main fuel tanks for vapor and fuel returned from the engine driven fuel pumps when operating on the auxiliary fuel tanks. If sufficient space is not available in the main tanks for this returned fuel, the tanks can overflow through the overboard fuel vents. Since part of the fuel from the auxiliary fuel tanks is diverted back to the main tanks instead of being consumed by the engines, the auxiliary tanks will empty sooner than may be anticipated. However, the main tank volume or quantity will be increased by the returned fuel.

The fuel supply in the auxiliary fuel tanks is intended for use during cruise flight only. The shape of the auxiliary fuel tanks is such that during certain flight maneuvers, the fuel will move away from the fuel tank outlet. If the outlet is uncovered while feeding the engine, fuel flow to the engine will be interrupted and a temporary loss of power may result. Because of this, operation from the auxiliary fuel tanks is not recommended below 1000 feet AGL.

An optional auxiliary fuel tank may be installed on some centerline thrust twins (336 and 337 Skymaster). The system consists of two tanks, each containing 18 gallons (108 pounds) usable, one located in each inboard wing panel. The tanks feed directly to the fuel selector valves. The left auxiliary tank provides fuel to the front engine only and the right auxiliary tank provides fuel to the rear engine only. Fuel quantity for the auxiliary tanks is read on the same fuel quantity indicators used for the main fuel tanks. This is accomplished when the fuel selector valve handles are turned to the AUXILIARY position. As each selector valve handle is turned to this position, it depresses a gaging button, labeled PUSH TO GAGE, located in the AUXILIARY quadrant of the fuel selector valve placard. The depressed button actuates a microswitch and electrically senses auxiliary fuel rather than main fuel quantity. Auxiliary fuel quantity can be checked without changing the selector valve handle, by depressing the PUSH TO GAGE button manually. Depressing the gaging button, either manually or by rotating the selector valve handle to the AUXILIARY position, will illuminate the amber AUX FUEL ON indicator lights mounted above the engine instrument cluster. When fuel is being used from the auxiliary fuel tanks, any excess fuel and vapor from the engine driven pumps is returned to fuel line manifolds. The returned vapor passes through the fuel line manifolds to the vent lines and is routed overboard. The excess

fuel passes into the fuel line manifold and is returned to the engine driven pumps.

On some early model Skymasters, fuel vapor from the engine driven fuel pumps is returned to the main fuel tanks. When the selector valve handles are in the AUXILIARY position, the left auxiliary tank feeds only the front engine and the right auxiliary tank feeds only the rear engine. If the auxiliary tanks are to be used, select fuel from the main tanks for 60 minutes prior to switching to auxiliary tanks. This is necessary to provide space in the main tanks for vapor and fuel returned from the engine driven fuel pumps when operating on auxiliary tanks. On some models, auxiliary fuel boost pumps are not provided for the auxiliary fuel tank. Therefore it is recommended to use the auxiliary fuel tanks only in straight and level flight. When unsure of the type of auxiliary tank installation, consult the operating handbook for the respective airplane.

A few single-engine airplanes contain an auxiliary fuel tank. The system's main components include a fuel tank installed on the baggage compartment floor and an electric fuel transfer pump. The auxiliary fuel system is plumbed into the right main fuel tank.

To use the auxiliary fuel system, select the right wing fuel tank in cruise and operate on that tank until the fuel tank has adequate room for the transfer of auxiliary fuel. After selecting the left main tank, turn on the auxiliary fuel transfer pump to refill the right main fuel tank from the auxiliary tank. Transfer will take from 45 minutes to 1 hour. Prior to transfer, ensure that adequate fuel is available in the left tank to allow time for the auxiliary tank to transfer.

Do not operate the transfer pump with the fuel selector valve turned to either the BOTH or RIGHT positions. Total or partial engine stoppage will result from air being pumped into fuel lines after fuel transfer has been completed. If this should occur the engine will restart in 3 to 5 seconds after turning off the transfer pump, as the air in the fuel line will be evacuated rapidly.

After transfer is complete and the pump has been turned off, the selector may be returned to BOTH or RIGHT. Takeoff, climb, and landing should always be conducted with the selector in the BOTH position for maximum safety.

WING LOCKER FUEL TANK USAGE

Some twins may have wing locker fuel tanks installed in the forward portion of each wing locker baggage area. These tanks are bladder type cells for storage of extra fuel to supplement the main tank fuel quantity. The fuel in these tanks cannot be fed directly to the engines. Instead, it has to be transferred to the main tanks by wing locker fuel transfer pumps. Fuel transfer should begin as soon as adequate volume is available in the main fuel tanks to hold the wing locker fuel. Waiting until the main tanks are low before transferring wing locker fuel does not allow early recognition of possible failure to transfer.

If wing locker fuel is to be used, consult the operating handbook for the quantity of main tank fuel which must first be used in the respective main tank for the transferred wing locker fuel. This will prevent overflowing of the main tank(s) when transferring the wing locker fuel.

Wing locker fuel transfer pump switches are provided to manually control the transfer of the wing locker fuel to the main tanks. These switches should be turned ON only to transfer fuel and turned OFF when indicator lights illuminate to show that fuel has been transferred. The transfer pumps use the fuel in the wing locker tank for lubrication and cooling. Therefore, transfer pump operation after fuel transfer is complete will shorten the life of the pump. Fuel should be cross fed, as required, to maintain fuel balance.

INSTRUMENT POWER

VACUUM POWER FAILURES

Many airplanes may be equipped with some type of back-up vacuum system for operation in the event the primary vacuum system becomes inoperative in flight. The backup system may be in the form of another engine-driven vacuum pump, in parallel with the primary pump, or an electric standby vacuum pump, also in parallel with the primary pump, or both. If a back-up system is not available and the attitude and directional indicators are disabled, the pilot must rely on partial instrument panel operation. This may include using the electrically-powered turn coordinator or turn and bank indicator and the magnetic compass, altimeter, airspeed indicator, and rate of climb indicator.

A suction gage, and in some airplanes a low-vacuum warning light, provides a means of monitoring the vacuum system for proper operation in flight. Operating handbooks reflect a desired suction range during normal operation of the airplane. A suction reading outside of this range may indicate a system malfunction, and in this case, the vacuum driven instruments should not be considered reliable. Whenever operation of the airplane's vacuum system is in doubt, land when practical for repairs.

In the event of a directional indicator and attitude indicator failure due to vacuum failure, the pilot must rely on partial instrument panel operation using the remaining instruments. VFR operations can generally be conducted satisfactorily without the vacuum instruments. However, instrument meteorological conditions (IMC) can be considerably more challenging. An instrument rated pilot should stay current on partial panel flying skills but both VFR and IFR pilots should maintain VFR conditions if a vacuum failure occurs while clear of clouds. All pilots should become familiar with the following procedure for executing a 180° turn in clouds with the aid of either the turn coordinator or the turn and bank indicator.

Upon inadvertently entering clouds, maintain control of the aircraft. If it is desired to turn back out of the clouds, the following action should be employed:

1. Note the compass heading.
2. Note the time in both minutes and seconds.
3. When the seconds indicate the nearest half minute, initiate a standard rate left turn, holding the turn coordinator or turn and bank indicator (if installed) symbolic airplane wing opposite the lower left index mark for 60 seconds. Then roll back to level flight by leveling the miniature airplane.
4. Check accuracy of turn by observing the compass heading which should be the reciprocal of the original heading.

5. If necessary, adjust heading primarily with skidding motions rather than rolling motions so that the compass will read more accurately.
6. Maintain altitude and airspeed by cautious application of elevator control. Avoid over controlling by keeping the hands off the control wheel as much as possible and steering only with the rudder.

If conditions dictate, a descent through a cloud deck to VFR conditions may be appropriate. To guard against a spiral dive, choose an easterly or westerly heading to minimize compass card swings due to changing bank angles. In addition, keep hands off the control wheel and steer a straight course with rudder control by monitoring the turn coordinator. Occasionally check the compass heading and make minor corrections to hold an approximate course. Before descending into the clouds, set up a stabilized let-down conditions as follows:

1. Extend landing gear (if applicable).
2. Enrichen the fuel mixture.
3. Use full carburetor heat (if applicable).
4. Reduce power to set up a 500 to 800 ft/min rate of descent.
5. Adjust the elevator trim and rudder trim (if installed) for a stabilized descent at 5 to 20 knots above the best glide speed for the airplane.
6. Keep hands off the control wheel.
7. Monitor turn coordinator and make corrections by rudder alone.
8. Check trend of compass card movement and make cautious corrections with rudder to stop the turn.
9. Upon breaking out of clouds, resume normal cruise flight.

ELECTRICAL POWER FAILURES

Many operating handbooks have emergency procedures for partial or total loss of electrical power in flight. These procedures should be reviewed periodically to remain knowledgeable of what to do in the event of an electrical problem. The pilot should maintain control of the airplane and land when practical if an electrical power loss is evident.

Early detection of an electrical power supply system malfunction can be accomplished by periodically monitoring the ammeter and, if equipped, low-voltage warning light. The cause of these malfunctions is difficult to determine in flight. Common causes of alternator or generator failure are a broken drive belt, alternator or generator drive, a defective alternator control unit or voltage regulator or wiring. Problems of this nature constitute an electrical emergency and should be addressed immediately.

If alternator power cannot be restored, and a second or back up alternator is not available, the pilot must rely on the limited power of the battery only. Every effort should be made to conserve electrical power for use with the most essential equipment, such as communication and navigation radios, by turning off or not using any non-essential equipment. Electric or electro-hydraulic landing gear systems should be extended manually and flaps (if electrically

operated) should remain retracted during approach and landing to conserve battery power, especially in instrument conditions.

If an electrical power loss is experienced, continued flight is possible but should be terminated as soon as practical. Such things as fuel quantity and engine temperature indicators and panel lights may no longer work. Hand-held nav/comm radios and other such products are widely available and marketed for just such a scenario; otherwise navigation by pilotage and appropriate loss of communication procedures for the airspace involved should be conducted. The pilot should always have a flashlight available for night flights.

LOSS OF PITOT/STATIC SOURCES

A thorough preflight inspection should reveal any blockage of the pitot tube, drain hole, or static port on the ground to allow corrective action to be taken prior to flight. Pilots should understand the various conditions and remedies associated with a loss of pitot-static sources.

Pitot heat should be used whenever flying in visible moisture and the temperature is near freezing. If airspeed is suspected to be in error while flying in possible icing conditions with the pitot heat on, the pitot heat switch should be cycled and the circuit breaker should be checked. If proper operation cannot be restored, the airspeed indicator must be considered unreliable.

If the pitot tube ram air inlet becomes blocked, the airspeed will drop to zero. If this blockage cannot be removed in flight, the pilot must rely on pitch attitude and power settings to maintain a safe airspeed. A slightly higher than normal power setting should be used to maintain a reasonable margin of extra airspeed on final.

When flying in clear ice conditions and pitot heat is unavailable, both the ram air inlet and the pitot drain hole could become blocked. This will cause the airspeed indicator to react like an altimeter, indicating a higher airspeed at higher altitudes and a lower airspeed at lower altitudes. The airspeed indicator must be ignored. A higher power setting appropriate to the overall icing problem should be used during the landing phase.

Many light single engine airplanes equipped with pitot heat may not be equipped with static source heat. If the static source becomes blocked, the airspeed indicator will still function, but will give erroneous indications. If the airplane climbs after the blockage occurs, the airspeed indicator will indicate lower than normal. If the airplane descends after the blockage occurs, the airspeed will indicate higher than actual. During the landing phase, this condition could deceive the pilot into thinking the airspeed is too high. The altimeter and vertical speed indicator will also be affected by a static source blockage. The altimeter will not indicate a change of altitude and the vertical speed indicator will indicate zero airspeed. Neither instrument will reflect any altitude changes.

Many airplanes are equipped with an alternate static air source vented within the cabin area. If static port blockage is suspected, the alternate static source should be selected. The cabin pressure will be slightly lower than ambient air, but will provide a reasonable level of accuracy to the pitot static system. With slightly less dense air in the cabin, the airspeed indicator and altimeter will both show slightly higher than normal indications.

If the airplane is not equipped with an alternate static source, and pitot/static instruments are essential for continued flight, the glass on the vertical speed indicator may be broken to provide cabin air to the static system lines. The vertical speed indicator will no longer be reliable, but the airspeed indicator and altimeter will be functional again, with slightly higher than normal indications.

GYRO SPIN UP AND SPIN DOWN

Gyro instruments, such as attitude and directional indicators, contain a high-speed rotor assembly driven by either electric or vacuum power. These instruments normally operate at very high RPM and can take up to 10 minutes or more to spin down after power is removed. Although some gyro instruments have a "quick erect" mechanism to permit manual erection of the rotor, which effectively minimizes time required before use, some gyro instruments still require up to 5 minutes or more to spin up and stabilize after power is applied. During this spin up or spin down time, the gyro instruments should not be considered reliable. A failed gyro can be detected by first checking the suction gage and, if available, low-voltage or low-vacuum lights as applicable and, second, checking for slow or erratic indications of the gyro instruments by cross-referencing with other flight instruments for contradictory indications.

FAILED GYRO EFFECT ON AUTOPILOT

Some autopilot systems receive roll and/or yaw rate inputs from the electrically-driven turn coordinator or turn and bank indicator. Other autopilot systems depend on vacuum-driven attitude and directional indicators for horizontal and azimuth reference. If a failure should occur in any of these instruments, the autopilot should be turned off. Random signals generated by a malfunctioning gyro could cause the autopilot to position the airplane in an unusual attitude. Use of the autopilot after a gyro failure may result in an out of trim condition. Be prepared to correct for this when turning off the autopilot.

ALTERNATE AIR SYSTEM

An alternate source of air is provided to ensure satisfactory engine operation in the event the normal induction air filter or air inlet becomes obstructed. Although alternate air controls vary from one airplane to another, the types are: carburetor heat, direct manual control, automatic control, or a combination of automatic and manual controls. In most cases, the alternate air is extracted from inside the engine cowling and is, therefore, unfiltered and hotter than normal induction air. A loss of power will be caused by the hotter air. The richer mixture may require adjustment of the mixture control. Consult the applicable airplane operating handbook for details concerning the use of the alternate air system.

CARBURETOR HEAT AND INDUCTION ICING

Carburetor heat and manually operated alternate air valve(s) are controlled by the pilot. The carburetor heat system uses unfiltered air from inside the engine cowling. This air is drawn into a shroud around an exhaust riser or muffler and then ducted to the carburetor heat valve in the induction air manifold. The carburetor heat valve is controlled by the pilot and should be used during suspected or known carburetor icing conditions. Carburetor heat may also be used as an alternate air source should the induction air inlet or induction air filter become blocked for any reason.

The use of full carburetor heat at full throttle usually results in a 1 to 2 inch loss of manifold pressure or a loss of approximately 150 RPM, depending upon the airplane model. Application or removal of carburetor heat at higher power settings may require adjustment of the fuel mixture. It may be impractical to lean the mixture under low engine power conditions.

When a go-around or balked landing is initiated after use of carburetor heat during the landing approach, the pilot should usually advance the throttle first, then move the carburetor heat to off or cold. The throttle application must be smooth and positive. Rapid throttle advancement in some icing conditions could result in the engine failing to respond and the loss of power could become critical because of the low altitude and low airspeed.

When the relative humidity is more than 50 percent and the ambient air temperature is between 20°F to 90°F, it is possible for ice to form inside the carburetor, since the temperature of the air passing through the venturi may drop as much as 60°F below the ambient air temperature. If not corrected, ice accumulation may cause complete engine stoppage.

A drop in engine RPM on fixed pitch propeller airplanes and a drop in engine manifold pressure on constant speed propeller airplanes are indications of

carburetor ice. If the airplane is equipped with a carburetor air temperature gage, the possibility of carburetor ice may be anticipated and prevented by maintaining the recommended amount of heat during cruise and letdown. Without the indications of a carburetor air temperature gage for reference, a pilot should use only the full heat or full cold position. An unknown amount of partial heat can cause carburetor ice. This can occur when ice that would ordinarily pass through the induction system is melted by partial carburetor heat and the water droplets then refreeze upon contact with the cold metal of the throttle plate. A carburetor air temperature gage may allow partial carburetor heat use, resulting in less power loss.

ALTERNATE AIR FOR FUEL INJECTED ENGINE ICING

Either an automatic alternate air system, a manually controlled alternate air system, or a combination automatic and manual system are incorporated on most fuel injected engines to address the potential of a blocked air induction system.

On engines equipped with automatic alternate air, ram air from the engine cowling inlet enters an air filter, which removes dust and other foreign matter that would be harmful to the engine. If the air inlet or the induction air filter should become blocked, suction created by the engine will open an alternate air door, allowing air to be admitted from either inside or outside the cowling, depending upon the airplane model. This air bypasses the filter and will result in a slight decrease in full throttle manifold pressure on non-turbocharged engines, and a notable decrease in manifold pressure from the selected cruise power setting on turbocharged engines. This manifold pressure may be recoverable, up to a particular altitude, with throttle and/or RPM adjustment. The alternate air doors should be kept closed on the ground to prevent engine damage caused by ingesting debris through the unfiltered air ducts. For details concerning a specific model, consult the airplane operating handbook.

Most twin engine airplanes have a manually controlled alternate air door in each engine induction air system. If a decrease in manifold pressure is experienced when flying in icing conditions, the alternate air doors should be manually opened. On most twins, this manual control has two positions. When fully in, normal filtered ram air is provided; when fully out, warm unfiltered air from inside the cowling is provided. Other twins have alternate air controls with an additional intermediate or center detent to provide cool, unfiltered ram air to the induction system in the event the induction air filter is blocked by matter other than ice.

Since the higher intake air temperature of the alternate air results in a decrease in engine power and turbocharger capability, it is recommended that the alternate induction air not be utilized until indications of induction air blockage (decreased manifold pressure) are actually observed.

If additional power is required, the pilot should increase RPM as required, move the throttles forward to maintain desired manifold pressure and readjust the fuel mixture controls as required. These recommendations do not replace the procedure in the airplane operating handbook.

Although most pilots are aware of the potential of carburetor to icing, many may think that a fuel injected engine is not subject to induction icing. Although a fuel injected engine will not form carburetor ice, other parts of the induction system such as bends in the system or the air filter can gather ice. Slush and/or snow can block the induction air filter. Induction air blockage can cause loss of manifold pressure or engine stoppage.

CARBON MONOXIDE

Carbon monoxide is a colorless, odorless, tasteless product of an internal combustion engine and is always present in exhaust fumes. Even minute quantities of carbon monoxide breathed over a long period of time may lead to dire consequences. Carbon monoxide has a greater ability to combine with the blood than oxygen. Once carbon monoxide is absorbed in the blood, it prevents the oxygen from being absorbed.

The symptoms of carbon monoxide poisoning are difficult to detect by the person afflicted and may include blurred thinking, a feeling of uneasiness, dizziness, headache, and loss of consciousness. If any of these symptoms occur, immediately open all cabin vents and turn the cabin heater off. Land as soon as possible at the nearest airport and seek medical attention if needed.

HEATER OPERATION

Many cabin heaters in general aviation airplanes operate by allowing ambient air to flow through an exhaust shroud where it is heated before being ducted into the cabin. Therefore, if anyone in the cabin smells exhaust fumes when using the cabin heater, immediately turn off the cabin heater and open all cabin vents. Land as soon as possible at the nearest airport and seek medical attention if needed.

WINDOW VENTILATION

If carbon monoxide is suspected in the cabin at any time, it is imperative that immediate ventilation be initiated, including the opening of cabin windows. Observe the maximum speed for window opening in flight. Opening a cabin window is probably the best means of ventilating the cabin while on the ground. However, care should be taken when parked with engine(s) operating or when in the vicinity of other airplanes that have their engines running. The exhaust gases from your airplane or the other airplane could enter the cabin through the open window. Also, engine exhaust could be forced into the cabin area during taxi operations or when taxiing downwind.

PRESSURIZED AIRPLANES

Refer to the operating handbook and/or approved flight manual for appropriate ventilation procedures.

TURBOCHARGER

When operating turbocharged engines, any power increases should be accomplished by increasing the propeller RPM first, then increasing the manifold pressure. Power reductions should be accomplished by reducing the manifold pressure first, then the RPM.

During cold weather operation, care should be exercised to insure that overboost does not occur during takeoff as a result of congealed oil in the waste gate actuating system. Before takeoff engine checks should not be accomplished until oil temperature is at least 75°F (minimum approved operating limit). Takeoff should not be started until oil temperature is above 100°F and oil pressure below 100 psi to assure proper oil flow to the turbocharger and its actuating system. Monitor manifold pressure during takeoff so as not to exceed specified takeoff limits. Advance the throttle slowly, pausing momentarily at approximately 30" MP to permit turbine speed to stabilize, then gradually open the throttle to obtain takeoff manifold pressure.

Prior to engine shut down, operate the engine at idle RPM for approximately 5 minutes to allow the turbocharger to cool and slow down. This reduces the possibility of turbine bearing coking caused by oil breakdown. This 5 minutes may be calculated from landing touchdown.

During pilot training, simulated engine out operation requiring the engine be shut down by closing the mixture should be held to an absolute minimum.

TURBOCHARGER FAILURE

The turbocharger system's purpose is to elevate manifold pressure and thus engine power to a level higher than can be obtained without it. A failure of the system will cause either an overboost condition or some degree of power loss. An overboost can be determined on the manifold pressure instrument and can be controlled by a throttle reduction.

If turbocharger failure results in power loss, it may be further complicated by an overly rich mixture. This rich mixture condition may be so severe as to cause a total power failure. Leaning the mixture may restore partial power. Partial or total power loss may also be caused by an exhaust system leak. A landing should be made as soon as practical for either an overboost or partial/total power loss.

IN-FLIGHT FIRES

FIRES IN FLIGHT

A preflight checklist is provided to aid the pilot in detecting conditions which could contribute to an airplane fire. Flight should not be attempted with known fuel, oil, or exhaust leaks, since they can lead to a fire. The presence of fuel or unusual oil or exhaust stains may be an indication of system leaks and should be corrected prior to flight.

Fires in flight must be controlled as quickly as possible by identifying and shutting down the affected system(s), then extinguishing the fire. Until this process is complete, the pilot should assume the worst and initiate action for an immediate landing. A pilot must not become distracted by the fire to the point that control of the airplane is lost. The pilot must be able to complete a deductive analysis of the situation to determine the source of the fire. Complete familiarity with the airplane and its systems will prove invaluable should a fire occur.

ENGINE COMPARTMENT FIRES

An engine compartment fire is usually caused by fuel contacting a hot surface, an electrical short, bleed air leak, or exhaust leak. If an engine compartment fire occurs on a single engine airplane, the first step should be to shut off the fuel supply to the engine by placing the mixture to idle cut off and the fuel selector/shutoff valve to the OFF position. The ignition switch should be left ON in order for the engine to use up the fuel which remains in the fuel lines and components between the fuel selector/shutoff valve and the engine. The airplane should be put into a sideslip, which will tend to keep the flames away from the occupants and the fuel tanks. If this procedure is ineffective, the pilot must make the most rapid emergency descent possible and an immediate landing.

In multi-engine airplanes, **both** auxiliary fuel pumps should be turned off to relieve pressure in the total fuel system (each auxiliary fuel pump pressurizes a crossfeed line to the opposite fuel selector). If equipped, the emergency crossfeed shutoff should also be activated. The engine on the wing in which the fire exists should be shut down and its fuel selector positioned to OFF even though the fire may not have originated in the fuel system. The cabin heater draws fuel from the crossfeed system on some airplanes, and should be turned off as well. The engine compartment fire extinguisher should be discharged if the airplane is so equipped.

An open foul weather window or emergency exit may produce a low pressure in the cabin. To avoid drawing the fire into the cabin area, the foul weather

window, emergency exits, or any openable windows should be kept closed. This condition is aggravated on some models, with the landing gear and wing flaps extended. Therefore, it is recommended to lower the landing gear as late in the landing approach as possible. A no flap landing should also be attempted, if practical.

ELECTRICAL FIRES

The initial indication of an electrical fire is usually the distinct odor of burning insulation. Once an electrical fire is detected, the pilot should attempt to identify the effected circuit by checking circuit breakers, instruments, avionics, etc. If the affected circuit cannot be readily detected and flight conditions permit, the battery/master switch and alternator switch(es) should be turned OFF to remove the possible sources of the fire. If at night, ensure the availability of a flashlight before turning off electrical power. Then, close off ventilating air as much as practical to reduce the chances of a sustained fire. If an oxygen system is available in the airplane and no visible signs of flame are evident, occupants should use oxygen until smoke clears.

If electrical power is essential for the flight, an attempt may be made to identify and isolate the effected circuit by turning the Master Switch and other electrical (except magneto) switches off and checking the condition of the circuit breakers to identify the affected circuit. If the circuit can be readily identified, leave it deactivated and restore power to the other circuits. If the circuit cannot be readily identified, turn the Master Switch on, and select switches that were on before the fire indication, one at a time, permitting some time to elapse after each switch is turned on, until the short circuit is identified. Make sure the fire is completely extinguished before opening vents. Land as soon as possible for repairs.

CABIN FIRES

Fire or smoke in the cabin should be controlled by identifying and shutting down the affected system, which is most likely to be electrical in nature, and landing as soon as possible. Smoke may be removed by opening the cabin air controls. However, if the smoke increases in intensity when the air controls are opened, they should be closed as this indicates a possible fire in the heating system, nose compartment baggage area, or that the increase in airflow is aggravating this condition.

In pressurized airplanes, the pressurization air system will remove smoke from the cabin. However, if the smoke is intense, it may be necessary to either depressurize at altitude, if oxygen is available for all occupants, or execute an emergency descent to 10,000 feet, terrain permitting. "Ram Air Dump" handle may be pulled to aid the clearing of smoke from the cabin.

The pilot may choose to expel the smoke through the foul weather window(s). The foul weather window(s) should be closed immediately if the fire becomes more intense when the window(s) are opened. If smoke is severe, and there are no visible signs of flame, use oxygen masks (if installed) and begin an immediate descent.

If a fire extinguisher is used, ventilate the cabin promptly after extinguishing the fire to reduce the gases produced by thermal decomposition. If the fire cannot be extinguished immediately, land as soon as possible.

IN-FLIGHT OPENING OF DOORS

The occurrence of an inadvertent door opening is not as great of a concern to the safety of the flight, as the pilot's reaction to the opening. If the pilot is overly distracted, loss of airplane control may result even though disruption of airflow by the door is minimal. While the shock of a sudden loud noise and increase in sustained noise level may be surprising, mental preparation for this event and a plan of action can eliminate inappropriate pilot reaction.

INADVERTENT OPENING OF BAGGAGE/CARGO DOORS

The flight characteristics of an airplane will not normally be affected by an open baggage or cargo door. The aerodynamic effects on an open door can vary, depending on the location of the door on the airplane and the method used to hinge the door in relation to the slipstream. Baggage/cargo doors mounted on the side of the aft fuselage and hinged at the front will tend to stay in a nearly closed position at most airspeeds and pose no special problems as long as the airplane is not in uncoordinated flight in a direction which would permit unsecured baggage to fall out of the airplane. Because of the door location and the presence of baggage in the immediate area, the door may not be accessible for closing in flight. Passengers, especially children, should never be allowed to occupy the baggage portion of the cabin for the purpose of closing the door in flight. The pilot should slow the airplane to minimize buffeting of the door and land as soon as practical.

Top hinged baggage/cargo doors will react differently than front hinged doors if improperly latched before takeoff. Doors of this type, may pop open at rotation because of the increase in angle of attack and the slipstream pushing underneath the edge of the unsecured door. After the initial opening, a baggage door will generally tend to stay open and then may gently close as speed is reduced and the aircraft is configured for landing (the doors will probably tend to open again during flair). A top hinged door on the side of the aft fuselage of a high wing airplane can sometimes be moved to a nearly closed position by lowering the wing flaps full down (within approved airspeed limitations) so that wing downwash will act upon the door. Unlatched nose baggage doors and large cargo doors on the side of the aft fuselage cannot be closed in flight and a landing should be made as soon as practical. The pilot should avoid any abrupt airplane maneuvers in multi-engine airplanes with an open nose baggage door, as this could throw loose objects out of the baggage compartment and into the propeller.

Front hinged wing locker doors in the aft part of the engine nacelle of multi-engine airplanes will likely trail open a few inches if they become unlatched. Near stall speed just prior to landing, an unlatched door may momentarily float to a full open position.

If a door comes open on takeoff and sufficient runway remains for a safe abort, the airplane should be stopped. If the decision is made to continue the takeoff, maintain required airspeed and return for landing as soon as practical.

INADVERTENT OPENING OF CABIN/EMERGENCY EXIT DOORS (UNPRESSURIZED)

If a cabin or emergency exit door should inadvertently open during unpressurized flight, the primary concern should be directed toward maintaining control of the airplane. Then, if a determination is made to close the door in flight, establish a safe altitude, trim the airplane at a reduced airspeed, and attempt to close the door. To facilitate closing the door, slide the adjacent seat aft slightly to obtain a better grasp of the door handle. The door handle must be in the close position prior to pulling the door closed, followed by rotating the handle to the locked position. Under no circumstances should the pilot leave his/her seat, or unfasten the restraint system to secure a door.

If a cabin door reopens when latched closed, the flight should be terminated as soon as practical and repairs made.

INADVERTENT OPENING OF CABIN/EMERGENCY EXIT DOORS (PRESSURIZED)

An inadvertent opening of a cabin/emergency exit door while the cabin is pressurized and the aircraft is above 12,500 feet, will require the use of supplemental oxygen or an emergency descent to an altitude below 12,500 feet. The pilot may attempt to close the door after ensuring that all occupants are using supplemental oxygen or the cabin altitude is below 10,000 feet. However, the primary concern should be maintaining control of the airplane. The flight should be terminated as soon as practical and the cause of the door opening determined before pressurized flight is continued. Under no circumstances should the pilot leave his/her seat, or unfasten the restraint system to secure a door.

MAINTENANCE

Airplanes require inspection and maintenance on a regular basis as outlined in the operating handbook, service/maintenance manuals, other servicing publications, and in Federal Aviation Regulations. A good visual inspection is a continuing maintenance procedure and should be performed by anyone who is involved with an airplane. This includes pilots, line personnel, and the maintenance department. When worn or damaged parts are discovered, it is essential that the defective parts be repaired or replaced to assure all systems remain operational. The source of information for proper maintenance is the airplane Service/Maintenance Manual and Service Letters or Service Bulletins. Cessna's Service/Maintenance Manuals are occasionally revised. Maintenance personnel should follow the recommendations in the latest revision. The owner/operator must ensure that all unacceptable conditions are corrected and the airplane receives repetitive and required inspections.

UNAUTHORIZED REPAIRS/MODIFICATIONS

All repair facilities and personnel should follow established repair procedures. Cessna does not support modifications to Cessna airplanes, whether by Supplemental Type Certificate or otherwise, unless those modifications are approved by Cessna. Such modifications may void any and all warranties on the airplane, since Cessna may not know the full effects on the overall airplane. Cessna has not tested and approved all such modifications by other companies. Operating procedures and performance data specified in the operating handbook and maintenance procedures specified in the Service/Maintenance Manual may no longer be accurate for the modified airplane. Operating procedures, maintenance procedures and performance data that are effected by modifications not approved by Cessna should be obtained from the STC owner.

AIRWORTHINESS OF OLDER AIRPLANES

For an airplane to remain airworthy and safe to operate, it should be operated in accordance with Cessna recommendations and cared for with sound inspection and maintenance practices.

An aging airplane needs more care and attention during maintenance processes and may require more frequent inspection of structural components for damage due to the effects of wear, deterioration, fatigue, environmental exposure, and accidental damage. Typical areas requiring more frequent inspection are:

1. Wing attach points and fuselage carry-through structure.
2. Wing spar capstrips, especially the lower ones.
3. Horizontal and vertical stabilizer attach points and spar structure.
4. Control surface structure and attach points.
5. Engine mounts, beams, and cowlings.
6. Landing gear structure and attach points.
7. Structural and flooring integrity of seat and equipment attachments.
8. Pressurized structures, especially around all doors, windows, windshields and other cutouts on pressurized airplanes.
9. Exhaust and cabin heater systems.

The final responsibility for airplane care rests with the owner/operator. All airplane owners/operators should use the following steps as a minimum guideline to ensure continued airworthiness of their airplanes:

1. Always follow recommended maintenance and inspection procedures.
2. Recognize that corrosion, overloading, or damage to structure can drastically shorten fatigue life.
3. Comply with all applicable Service Bulletins, Service Letters, and FAA Airworthiness Directives.
4. Use one of Cessna's Progressive Care Inspection and maintenance programs to get the maximum utilization of your airplane at a minimum cost and downtime.

CORROSION

Corrosion can cause structural failure if left unchecked. The appearance of the corrosion varies with the metal. On aluminum and magnesium, it appears as surface pitting and etching, often combined with a grey or white powdery deposit. On copper and copper alloys the corrosion forms a greenish oxide and on steel, a reddish rust. When grey, white, green or red deposits are removed, each of the surfaces may appear etched and pitted, depending upon the length of exposure and severity of the attack. If the damage is not too deep, it may not significantly alter the strength of the metal. However, the pits may become sites for crack development. Some types of corrosion can travel beneath surface coatings and spread until the part fails.

Remove corrosion as soon as possible because it attacks and holds moisture in contact with the metal, which causes more corrosion to form. Every visible trace must be removed by some mechanical or chemical means. The surface must then be chemically treated to form a film which prevents oxygen or moisture from contacting the surface. Then, the protective surface (paint) must be restored.

There are several different types of corrosion and different ways of detecting it in its early stages. Uniform surface corrosion is the most common type of corrosion. When an area of unprotected metal is exposed to the atmosphere, there will be a uniform attack over the entire unprotected area. On a polished

surface, this type of corrosion is first seen as a general dulling of the surface. If the corrosion is allowed to continue, the surface becomes rough and possibly frosted in appearance.

If surface corrosion is allowed to go untreated, it can progress into the next type of corrosion, called pitting. Pits form in localized areas and appear as white or grey powdery deposits. Metal is converted to salts, and when deposits are cleaned away, tiny pits or holes can be seen on the surface. If allowed to continue, pitting can progress completely through the metal in extreme cases.

Stress corrosion cracking is caused by the simultaneous effects of tensile stress and corrosion. Stress may be either internal or applied. Residual stress from the processes of heat treatment and forming, or sustained operating or static loads, can lead to stress corrosion.

Fretting corrosion is corrosion damage between close fitting parts which are allowed to rub together. It is the corrosive attack on one or both metals because of chafing under a load. The results of fretting are removal or pitting of the metal in the area of contact, galling, seizing, cracking or fatigue of the metal, loss of tolerance in accurately fitted parts, and loosening of bolted or clamped surfaces.

Corrosion is a universal problem that costs considerable amounts of time and money. It is essential that each airplane owner maintain his or her airplane based on the operating conditions, environment, and service experience. Corrosion can be effectively prevented and/or controlled if appropriate action is taken early.

SEAT AND RESTRAINT SYSTEMS

ADJUSTABLE SEAT ASSEMBLIES

Most Cessna manually-adjustable seats are suspended on two parallel, cabin floor mounted seat tracks by roller assemblies which allow the seat to move forward and rearward along the tracks. A series of holes are provided, usually in the forward end of either or both seat tracks, to accommodate a mechanical locking pin(s) which allows intermediate positioning and locking of the seat. To prevent the seat from disengaging from the seat tracks when reaching the ends, a mechanical seat stop is installed near both ends of the track(s).

Incidents of manually-adjustable seats slipping rearward or forward during acceleration or deceleration of the airplane have been reported. The investigations following these incidents have revealed discrepancies such as gouged lockpin holes, bent lockpins, excessive clearance between seat rollers and tracks, and missing seat stops, to name a few. Also, dust, dirt, and debris accumulations on seat tracks and in the intermediate adjustment holes have been found to contribute to the problem. A close check of each seat during daily preflight, improved cabin cleanliness, and replacement of parts when necessary will help prevent accidents involving seats. Visual checks of the airplane should always include the cabin interior.

When inspections are made, examination of the following items is recommended:

1. Check the seat assembly for structural integrity.
2. Inspect the roller assemblies for separation and wear.
3. Check the locking mechanism (actuating arm, linkage, locking pin or pins) for wear.
4. Check all seat track stops for security and proper installation.
5. Inspect seat tracks for condition and security, and the locking pin holes for wear, and dirt or debris accumulation.
6. Determine that the floor structure in the vicinity of the seat tracks is not cracked or distorted.
7. Ensure that the secondary seat stop addressed in mandatory Service Bulletin SEB89-32 is installed.

Damaged or worn parts are a potential hazard which should be immediately repaired or replaced. Cessna recommends repair and/or replacement of damaged components in accordance with the airplane's service or maintenance publications and Service Bulletins.

RESTRAINT SYSTEMS

While performing the cabin portion of the daily preflight, it is recommended that pilots check each restraint system installed in the airplane. This should include a functional check of the restraint belt locking and releasing mechanism. If new passengers or students are to be carried, it is a good practice to insist that they operate the restraint system to become familiar with the procedures.

During inspections, maintenance personnel should check each restraint system installation for serviceability in accordance with current publications applicable to the airplane. Special attention should be given to restraint attachment points and to the nylon bushing on the belt at the point where the shoulder restraint harness attaches. Undetected cracks or broken connections could cause a serious situation to develop when it is least expected. The restraint system webbing should be inspected for degradation. Repair or replace the restraint system per Cessna instructions if damage is detected.

EXHAUST AND FUEL SYSTEMS

THE ENGINE EXHAUST SYSTEM

The primary function of an engine exhaust system is to route exhaust gases safely overboard. Other functions of the exhaust system may include use as the driving source for a turbocharger turbine and/or use as a heat source for carburetor and/or cabin heat requirements.

Heat and carbon monoxide are the unavoidable byproducts of all reciprocating engine operations. The temperatures within the exhaust system of an engine can exceed 1750°F. Consequently, if an exhaust leak should occur, heat damage can occur to the engine mounting structure, and accessories such as hoses, belts, wire bundles, etc. In some cases, the position of the leak could lead to engine stoppage and/or an engine compartment fire.

An exhaust system leak can also lead to carbon monoxide poisoning. This colorless, odorless, tasteless combustion byproduct is always present in exhaust fumes. For this reason, special seals are provided wherever cables, hoses, wire bundles, etc. pass through the engine firewall. For even greater protection from carbon monoxide, special window, door, and fuselage seals are installed. No leakage of exhaust into the cabin should be tolerated.

Exhaust systems should be checked for stains indicative of exhaust leaks at cylinder heads or cracks in the exhaust or tailpipe. The condition and security of the exhaust system in the area of the exhaust muffler shroud should be checked. Any cracks or leaks in this area could be a source for exhaust to enter the cabin.

ENGINE COMPARTMENT TEMPERATURES

High engine compartment temperatures can degrade the operational efficiency of the engine and also accelerate the deterioration of engine components. Several conditions could cause or contribute to a higher than normal engine compartment temperature; however, improper operating techniques are found to be the most common cause. Avoid excessive operation of an engine on the ground. Prolonged ground operations should be done into the wind at rich mixture settings. If the cowling has been removed for maintenance, cooling airflow is poor and cylinder head temperature and oil temperature gages must be monitored during engine runups.

On virtually all air-cooled reciprocating engines, the engine and engine compartment are cooled by utilizing a pressure cooling baffle system with airflow as the cooling medium. The condition of these baffles and their seals is important.

Baffles should be secure and baffle seals should be positioned in a direction which would seal airflow around the engine baffles. Even a slight reduction in cooling efficiency can cause the engine to operate hotter than normal, thus increasing the potential for heat damaged components.

An inspection of the engine compartment, plus careful observation of the engine temperatures during normal flight, can be of great assistance in verifying the condition of the engine. If the pilot takes the time to record engine temperatures on a regular basis, trends within the engine can be detected early and corrected before a serious condition occurs.

HOSES AND WIRE HARNESS INTEGRITY

All fuel, oil, and hydraulic components should be checked for condition, security and any evidence of leakage. All leaks should be repaired before starting the engine.

As airplanes and engines age, there is a need to re-emphasize the inspection or replacement requirements of engine hoses or lines that carry fuel, oil, or hydraulic fluid. For newer Cessnas, a replacement requirement for hoses in the engine compartment (except teflon lined) has been established at each 5 years or at engine overhaul, whichever occurs first. This is considered to include "shelf" life. All hose manufactured for airplane use is marked indicating the quarter-year in which they were manufactured. For instance, a listing of "4Q85" means the hose was manufactured in the fourth quarter of 1985. Maintenance personnel should not use hoses with a high "shelf" life age.

Like time, heat is always a detriment to hoses. The prudent pilot realizes during the daily preflight, that an engine hose might look good, but if it is wiggled, a telltale "crackle" may be heard. This means that the hose is brittle and should be replaced. Also if he slides his hand over the back side of the hose, he may find an abrasion or wear not visible from the front side.

Ignition leads/wire harnesses and spark plugs are also affected by excessive heating in the engine compartment. Overheating of the spark plug barrels, sometimes caused by damaged cylinder baffles or missing cooling air blast tubes, may seriously deteriorate the ignition leads. Any overheating of a spark plug by a defective baffle or exhaust gas leak at the exhaust pipe mounting flange can generate temperatures sufficient to cause pre-ignition and piston distress.

RETRACTABLE LANDING GEAR

The adjustment and rigging of a retractable landing gear system should be done by trained maintenance personnel. Continued reliability of the landing gear system is only possible if it is properly maintained in the prescribed published manner. The rigging process must be performed exactly as published in the Cessna Service/Maintenance Manual and Service Bulletins. For complete emergency procedures concerning landing gear extension, refer to the airplane operating handbook.

PRESSURIZED AIRPLANES

DOOR SECURITY

The conventional and air-stair doors on pressurized airplanes have a series of pins, actuated by an overcenter locking handle, to maintain the door seal during the pressurization cycle. Some air-stair doors are sealed by pressurization air pressing against the cabin door windlace which covers the door gap. Door security can be verified by visually checking the locking indicator for the door handle safety lock, in the case of single-engine airplanes, and checking for correct locking indications provided in the door of multi-engine airplanes. It is recommended that pilots check the locking pins and door seals for cracks or damage during each preflight. Any damaged parts should be repaired prior to pressurized flight.

WINDOWS AND WINDSHIELDS

The windows in pressurized airplanes are exposed to a fatigue cycle each time the airplane is pressurized. These cycles could lead to fatigue cracks in and around the windows. Windows should be inspected frequently for condition and serviceability. Windows or windshields having replacement life limits should be replaced prior to intervals defined in applicable service/maintenance manuals.

The windows and windshields on pressurized airplanes are particularly sensitive to crazing and scratches. Any crazing, cracks, or deep scratches cannot be tolerated for pressurized flight. Consult the airplane's operating manual when in doubt about the severity of the damage. Repairs should be completed prior to pressurized flight.

THE PRESSURE VESSEL

There are significant structural differences between the fuselage of a non-pressurized airplane and one which is pressurized. The pressure vessel is the portion of the cabin area to be pressurized. Pressure differential is the difference between the atmospheric pressure at the altitude at which the airplane is flying and the pressure inside the cabin.

Any seam, joint, or hole where wire bundles or tubing pass through the pressure vessel must be sealed to maintain the selected pressurization. If any of these seals are deteriorated or missing, the normal cabin pressure differential may be impossible to attain. Maintenance personnel should inspect the pressure seals for serviceability. Any cracks in the skin of the pressure

vessel could lead to sudden depressurization. Maintenance personnel should carefully inspect the pressure vessel for cracks, corrosion, and deterioration. Any damage should be corrected before pressurized flight.

If the airplane cabin is pressurized and it becomes necessary to use the heated alternate induction air on both engines, the pressurization controls must be selected OFF to preventing nacelle fumes from entering the cabin. The cabin should be depressurized and maximum ventilation provided. Therefore, if the flight altitude is above 10,000 feet, all occupants should use oxygen, if available, or descent should be initiated.

POTENTIAL HAZARDS

PROPELLERS

WARNING

ALWAYS STAND CLEAR OF PROPELLER BLADE PATHS, ESPECIALLY WHEN MOVING THE PROPELLER. PARTICULAR CAUTION SHOULD BE PRACTICED AROUND WARM ENGINES.

Review of propeller accidents indicates that most were preventable. A propeller under power, even at slow idling speed, has sufficient force to inflict fatal injuries. Pilots can be most effective in ensuring that passengers arrive and depart the vicinity of the airplane safely by stopping the engine(s) during loading and unloading.

Cessna airplanes are delivered with propellers using paint schemes to increase visibility of the blades. Owners should maintain the original paint scheme.

Pilots and Service personnel should develop the following safety habits:

1. Before moving a propeller or connecting an external power source to an airplane, be sure that the airplane is chocked, ignition switches are in the OFF position, throttle is closed, mixture is in IDLE CUT-OFF position, and all equipment and personnel are clear of the propeller. Failed diodes in airplane electrical systems have caused starters to engage when external power was applied regardless of the switch position.
2. When removing an external power source from an airplane, keep the equipment and yourself clear of the propeller.
3. Pilots should make certain that all personnel are clear of the propeller, prior to engine start.
4. Attach pull ropes to wheel chocks located close to a rotating propeller(s).
5. Before removing the wheel chocks, the pilot should hold brakes or apply the parking brake.
6. Be absolutely sure that all equipment and personnel are clear of the airplane before releasing the brakes.
7. Ground personnel should be given recurrent propeller safety training to keep them alert to the dangers of working around airplanes.

The pilot should carefully inspect the propeller during each preflight inspection. Most constant speed propellers manufactured by McCauley are subject to a requirement that they be filled with a red-dyed oil. This oil helps lubricate and

prevent corrosion of internal propeller parts and may assist in detection of cracks. If a crack is detected, the airplane should not be flown until the propeller is replaced.

AIR CONDITIONING FREON

The refrigerant R- 12 (FREON) is relatively safe to handle when using proper protective safety equipment. Since at sea level the boiling point of R- 12 is -21.6°F, any contact with bare skin will immediately burn (freeze) the area. If R-12 should contact your eye, it will burn and can cause permanent blindness. Treat spills or splashes on your body by washing with clean, cool, water, and seek immediate medical attention. R-12, when heated to a high temperature such as with an open flame or spillage on a hot manifold, generates phosgene gas (a colorless gas with an unpleasant odor). This gas is a severe respiratory irritant and should be considered as a DEADLY POISON.

USED ENGINE OIL

Pilots and maintenance personnel who handle engine oil are advised to minimize skin contact with used oil, and promptly remove any used engine oil from their skin.

The following are some do's and don'ts concerning used engine oil:

1. Do follow work practices that minimize the amount of skin exposed, and the length of time used oil stays on the skin.
2. Do thoroughly wash used oil off skin as soon as possible.
3. Do wash oil-soaked clothing before wearing them again. Discard oil-soaked shoes.
4. Do use gloves made from material that oil cannot penetrate.
5. Don't use kerosene, gasoline, thinners, or solvents to remove used engine oil. These products can cause serious toxic effects.
7. Don't put oily rags in pockets, or tuck them under a belt. This can cause continuous skin contact.
8. Don't pour used engine oil on the ground, or down drains and sewers. This is a violation of Federal Law. The Environmental Protection Agency (EPA) encourages collection of used engine oil at collection points in compliance with appropriate state and local ordinances.

AVIATION FUEL ADDITIVE

Ethylene glycol monomethyl ether (EGME), which is a primary ingredient in aviation fuel additives, is toxic. It creates a dangerous health hazard when breathed or absorbed into the skin. When inhaled, EGME is primarily a central nervous system depressant, and acute inhalation overexposure may cause kidney injury. The primary symptoms of inhalation overexposure include

headache, drowsiness, blurred vision, weakness, lack of coordination, tremor, unconsciousness, and even death. EGME is irritating to the eyes and skin and can be readily absorbed through the skin in toxic amounts. Symptoms of overexposure due to skin absorption are essentially the same as those outlined for inhalation.

When servicing fuel with an anti-ice additive containing EGME, follow the manufacturers instructions and use appropriate personal protective equipment. These items would include chemical safety goggles or shield, respirator with organic vapor cartridges, nonabsorbing neoprene rubber gloves and an apron and long-sleeved shirt as additional skin protection from spraying or splashing anti-ice additive.

In the event EGME contact is experienced, the following emergency and first aid procedures should be used.

1. If EGME is inhaled, remove person to fresh air. If breathing is difficult, administer oxygen. If the person is not breathing give artificial respiration. Always call a physician.
2. If eye or skin contact is experienced, flush with plenty of water (use soap and water for skin) for at least 15 minutes while removing contaminated clothing and shoes. Call a physician. Thoroughly wash contaminated clothing and shoes before reuse.
3. If ingested, drink large quantities of water and induce vomiting by placing a finger far back in throat. Contact a physician immediately. If vomiting cannot be induced, or if victim is unconscious or in convulsions, take immediately to a hospital or physician. Do not induce vomiting or give anything by mouth to an unconscious person.

Diethylene glycol monomethyl ether (DIEGME), a fuel anti-icing additive approved for use in some airplanes, is slightly toxic if swallowed and may cause eye redness, swelling and irritation. DIEGME also is combustible. Before using DIEGME, refer to all safety information on the container.

BIRDS, INSECTS, AND RODENTS

Bird, insect, and mouse nests in airplanes are both hazardous and costly. They seem to find even the smallest opening on an airplane to make their nests. Evidence of nest building activities may include the following:

1. Any mud smears or droplets at pitot/static masts, fuel tank vents, crankcase breathers, stall warning vanes, cabin air vents, and any fluid drain holes are indications of mud dauber wasp activities.
2. Straw, string, or blades of grass extending from cowling openings, carburetor air intakes, blast tubes, or exhaust stacks are signs of birds at work.
3. Cotton batting, shreds of fabric, and/or paper at wheel wells and empennage openings are frequently indicators that rodents such as

mice have been or may still be on board. They may gnaw on
material in the airplane including wire bundles and rubber or
tubing.

If nests or building materials are found on the airplane, they must be re
before flight. It is strongly recommended that a qualified mechanic thor
inspect components such as pitot/static systems for remains of any nes
material after its removal and before flight to ensure complete removal.
small amounts of foreign material can result in significant problems in flight.

Some precautions can be taken to prevent problems. Always use the
tube cover and any other external covers when the airplane is being stored
the airplane is hangared, make sure the hangar is kept clean and
prevent insects and mice from lodging in the hanger in the first place. If
be, set traps for rodents and/or spray the area for insects. Models
predators that appear life-like such as owls or snakes may also be effective
preventing some birds from lodging in a hangar.

Removal of the nest of an insect, bird, or rodent does not
reconstruction elsewhere on the airplane or even in the same location
Some creatures are not easily discouraged and may return to cause
within a very short time period. Regardless of precautions used to
such problems, the pilot should be alert to the evidence of small
activities during every preflight inspection.

FIRE EXTINGUISHER AGENTS

Halon, Bromochloromethane (CB), Carbon Dioxide (CO_2), and dry chem
extinguishing agents are four of the most common types of fire extinguis
agents found in and around airplanes. Prolonged exposure (5 minutes
more) to any of these agents in a confined area could cause serious injury
even death. Pilots and ground personnel should become familiar with
precautions associated with each particular agent. Adequate respiratory
eye protection from excessive exposure, including the use of oxygen
available, should be sought as soon as the primary fire emergency will permit.

The discharge of large amounts of carbon dioxide to extinguish a fire
create hazards to personnel such as oxygen deficiency and reduced visibility.
The dilution of the oxygen in the air, by the carbon dioxide concentrations
will extinguish a fire, may create an atmosphere that will not sustain life.
Personnel rendered unconscious under these conditions can usually be
revived without any permanent ill effects when promptly removed from the
adverse condition.

The discharge of large amounts of dry chemical agents may create hazards to
personnel such as reduced visibility and temporary breathing difficulty. While
there is a possibility that personnel may be exposed to dry chemical agents,
suitable safeguards should be provided to ensure prompt evacuation.

OXYGEN

servicing any airplane with oxygen, consult the specific airplane
maintenance manual to determine the proper type of servicing
to be used. Airplanes should not be serviced with oxygen during
defueling, or other maintenance work which could provide fuel and a
ignition. Also, oxygen servicing of an airplane should be
outside, not in hangars.

is a very reactive material, combining with most of the chemical
The union of oxygen with another substance is known as oxidation.
rapid or spontaneous oxidation is known as combustion. While
non-combustible in itself, it strongly and rapidly accelerates the
of all flammable materials; some to an explosive degree.

The following are some do's and don'ts when handling or using oxygen:

1. Do check that only "aviators breathing oxygen" is going into the airplane system.
2. Don't confuse aviators breathing oxygen with "hospital/medical" oxygen. (The latter is pure enough for breathing, but the moisture content is usually higher which could freeze and plug the lines and valves of an airplane oxygen system.)
3. Do reject any oxygen that has an abnormal odor (good oxygen is odorless).
4. Do follow the published applicable instructions regarding charging, purging, and maintenance of airplane oxygen systems.
5. Don't use oil or grease (including certain lipsticks and lip balms) on oxygen systems.
6. Don't expose oxygen containers to high temperatures.

COMPRESSED AIR

Compressed air is a mechanic's tool as versatile as electricity, and can be as
The use of compressed air to blow dust or dirt from parts of the body
is a dangerous practice. As little as 12 psi can dislocate an
can enter the navel through a layer of clothing and inflate and
passages. Compressed air has been known to strike a small
a person's hand and inflate the arm.

psi or point any compressed air apparatus toward any part of the
wear prescribed personal protective equipment. Also,
check the condition of air tools and air hoses to make sure they
signs of damage or looseness. A loose hose carrying pressure is
and can cause serious injury to personnel and/or cause damage

to surrounding equipment. If a situation such as this should occur, do not attempt to catch the hose end; shut off the air source first.

STATIC ELECTRICITY

Static electricity, by definition, is a negative or positive charge of electricity that an object accumulates, and creates a spark when the object comes near another object. Static electricity may accumulate on an airplane during flight or while it is on the ground, as long as air is flowing over its surfaces. Unless static electricity is carried away by ground wires, an explosion may be caused during any fueling operations.

Grounding an airplane is a good safety precaution because static electricity cannot be seen until it's too late. To properly ground an airplane, attach one end of a static ground wire to an unpainted point on the airplane and the other end to an approved grounding stake. Attaching the ground wire to the airplane first will ensure that any spark of static electricity will occur at the grounding stake and not at the airplane. Do not attach a ground wire to any antenna. Antennas are poor grounding attachment points because they are insulated from the airplane structure.

On some airplanes, wick-type static dischargers are installed to improve radio communications during flight through dust or various forms of precipitation (rain, snow or ice crystals). Under these conditions, the build-up and discharge of static electricity from the trailing edges of wings, rudder, elevator and propeller tips can result in loss of usable radio signals on all communications and navigation radio equipment. Usually the ADF is first to be affected and VHF communication equipment is the last to be affected. Installation of static dischargers reduces interference from precipitation static, but it is possible to encounter severe precipitation static conditions which might cause the loss of radio signals, even with static dischargers installed.

Static dischargers lose their effectiveness with age, and therefore should be checked at every scheduled inspection by a qualified technician. If testing equipment is not available, it is recommended that the wicks be replaced every two years, especially if the airplane is operated frequently in IFR conditions.

ELT BATTERY AND GAS SPRING/DAMPER DISPOSAL

To prevent bodily injury, do not compact (compress) or incinerate an ELT battery-pack or gas spring/damper. The ELT battery pack should be discarded in accordance with local EPA standards.

A gas spring or gas damper contains an inert gas and oil under pressure, and reacts much like an aerosol can when compressed or heated; it may explode. Therefore, all unserviceable gas springs or dampers should be depressurized using the maintenance manual instructions.

HEARING LOSS

Hearing loss due to overexposure to loud noise levels is a real possibility while working near operating airplane engines. Continuous exposure to excessive noise diminishes hearing acuity, with high frequency response failing first. If noise exposure continues, the middle frequencies, most important in speech, are also lost. Earmuffs, some headset types, and earplugs are recommended to avoid hearing loss. By far, the earplug has proven to be the best protection overall. Limits have been established which relate sound level to noise exposure time. These limits are based on daily exposures for long periods.

Sound Level (dB)	115	110	105	100
Maximum Time (min.)	15	30	60	120

WEATHER RADAR EXPOSURE

There are dangers of exposure to airborne weather radar operated on the ground including the possibility of damage to low tolerance parts of the human body and ignition of combustible materials by radiated energy. Low tolerance parts of the body include the eyes and testes. Airborne weather radar should be operated on the ground only by qualified personnel. The radar should not be operated while the airplane is in a hangar or other enclosure unless the radar antenna is disconnected, or the energy is directed toward an absorption material which dissipates the radio frequency (RF) energy.

Personnel should never stand near or directly in front of a radar antenna which is transmitting. When the antenna is transmitting and scanning, personnel should not be allowed within 15 feet of the area being scanned by the antenna.

Personnel should not be allowed at the end of an open waveguide (hollow duct through which electromagnetic waves are conducted to and from the radar) unless the radar is off and will remain off. Radar should not be operated into an open waveguide unless a "dummy load" is connected to the waveguide which is connected to the transmitter. Personnel should not look into a waveguide or the open end of a coaxial connector or line connected to a transmitter.

Radar equipment installed on any airplane should not be operated while that airplane or an adjacent airplane is being refueled or defueled.